V1.2 2026-06-30

Residential Smart Off-Grid Inverter

EO G2 3.0-6.0kW

· LX A5.0-10

· LX A5.0-30

· GW16.1-BAT-LV-G10

Solutions Manual

GOODWE

Copyright Statement

Copyright Statement

Copyright©GoodWe Technologies Co., Ltd. 2026. All rights reserved.

Without the authorization of GoodWe Technologies Co., Ltd., all content of this manual may not be reproduced, disseminated, or uploaded to public networks or other third-party platforms in any form.

Trademark Authorization

GOODWE and other GOODWE trademarks used in this manual are the property of GoodWe Technologies Co., Ltd. All other trademarks or registered trademarks mentioned in this manual are the property of their respective owners.

NOTICE

Due to product version upgrades or other reasons, the content of this document will be updated periodically. Unless otherwise agreed, the content of this document cannot replace the safety precautions on the product label. All descriptions in this document are for guidance only.

About This Manual

Overview

This document mainly introduces the product information, installation wiring, configuration testing, troubleshooting, and maintenance content in the energy storage system composed of inverters, Battery system, and smart meters. Before installing and using the product, please read this manual carefully to understand the product safety information and familiarize yourself with the functions and features of the product. The document may be updated periodically. Please obtain the latest version and more product information from the official website.

Applicable Model

The energy storage system includes the following products:

Product Type	Product Information	Description
Inverter	GW3K-EO-G20	Nominal output power: 3.0kW
	GW3.6K-EO-G20	Nominal output power: 3.6kW
	GW5K-EO-G20	Nominal output power: 5.0kW
	GW6K-EO-G20	Nominal output power: 6.0kW
Battery system	LX A5.0-10	Rated capacity 5.0kWh, maximum support for 15 clusters in parallel
	LX A5.0-30	Rated capacity 5.12kWh, maximum support for 30 clusters in parallel
	GW16.1-BAT-LV-G10	Rated capacity 16.1kWh, maximum support for 30 clusters in parallel
Smart Meter	GMK110	Monitoring module in the energy storage system, capable of detecting operational voltage, current, and other information within the system.
	GM330	

Symbol Definition

⚠DANGER
Indicates a high potential hazard which, if not avoided, will result in death or serious injury.
⚠WARNING
Indicates a moderate potential hazard which, if not avoided, could result in death or serious injury.
⚠CAUTION
Indicates a low potential hazard which, if not avoided, could result in moderate or minor injury.
NOTICE
Emphasizes or supplements the content, may also provide tips or tricks for optimal product use, which can help you solve a problem or save your time.

Table of Contents

1 Safety Precautions 10
1.1 General Safety 10
1.2 personnel requirements 11
1.3 System Safety 12
1.3.1 PV String Safety 14
1.3.2 Inverter Safety 15
1.3.3 Battery Safety 16
1.3.4 Smart Meter Safety 18
1.4 Safety Symbols and Certification Marks 19
2 System Introduction 22
2.1 System Overview 22
2.2 Product Overview 28
2.2.1 Inverter 28
2.2.2 Battery 31
2.2.2.1 LX A5.0-10 31
2.2.2.2 LX A5.0-30 32
2.2.2.3 GW16.1-BAT-LV-G10 33
2.2.3 Smart Meter 34
2.3 Supported Grid Types 35
2.4 System Working Mode 36
2.5 Features 41

3 Check and Storage 43
3.1 Check Before Receiving 43
3.2 deliverables 43
3.2.1 Inverter Deliverables 43
3.2.2 Batteries Deliverables 44
3.2.2.1 Battery Deliverables (LX A5.0-30) 44
3.2.2.2 Battery Deliverables (LX A5.0-10) 46
3.2.2.3 Battery Deliverables (GW16.1-BAT-LV-G10) 47
3.2.3 Combiner Box Deliverables 49
3.2.3.1 BCB-11-WW-0 49
3.2.3.2 BCB-22-WW-0 49
3.2.3.3 BCB-32-WW-0 49
3.2.4 Smart Meter Deliverables 50
3.2.4.1 Smart Meter (GMK110) 50
3.2.4.2 Smart Meter (GM330) 50
3.3 Storage 51
4 Installation 54
4.1 System Installation and Commissioning Procedure 54
4.2 Installation Requirements 55
4.2.1 Installation Environment Requirements 55
4.2.2 Installation Space Requirements 57
4.2.3 Tool Requirements 58

4.3 Equipment Handling 60
4.4 Installing the Inverter 61
4.5 Installing the Battery System 62
4.5.1 LX A5.0-30 62
4.5.2 LX A5.0-10 65
4.5.3 GW16.1-BAT-LV-G10 67
4.6 Installing the Smart Meter 68
5 System Wirings 70
5.1 System Wiring Electrical Block Diagram 70
5.2 Detailed System Wiring Diagram 72
5.2.1 Detailed System Wiring Diagram for Single Inverter 72
5.2.2 Detailed System Wiring Diagram for Parallel System 76
5.2.3 Single-Phase to Three-Phase System Wiring 79
5.3 Preparing Materials 82
5.3.1 Preparing Breakers 83
5.3.2 Preparing Cables 84
5.4 Removing the Inverter Bottom Cover 86
5.5 Connecting the PE cable 87
5.6 Connecting the PV Cable 89
5.7 Connecting the Battery Cable 90
5.7.1 Connecting the Power Cable between the Inverter and Battery 106
5.7.2 Connecting the Communication Cable between the Inverter and 110

Battery
5.8 Connecting the AC Cable 113
5.9 Connecting the Meter Cable 114
5.10 Connecting the Inverter Communication Cable 117
5.11 Installing the Inverter Chassis Bottom Cover 121
5.12 Installing Battery Protective Cover 121
5.12.1 LX A5.0-10 122
5.12.2 LX A5.0-30 122
5.12.3 GW16.1-BAT-LV-G10 122
6 System Commissioning 123
6.1 Check Before Power ON 123
6.2 Power ON 123
6.3 Indicators 125
6.3.1 Battery Indicators 125
6.3.1.1 LX A5.0-10 125
6.3.1.2 LX A5.0-30 127
6.3.1.3 GW16.1-BAT-LV-G10 128
6.3.2 Smart Meter Indicator 131
7 System Commissioning and Power Plant Monitoring 132
7.1 Device Commissioning and Power Plant Monitoring via SEMS+ App 132
7.2 Device Commissioning and Power Plant Monitoring via SEMS+ WEB 133
7.3 Device Commissioning via LCD 134

7.3.1 LCD Overview 134
7.3.2 Parallel System Settings 136
7.3.3 Quick Settings 138
7.3.4 Setting Advanced Parameters 144
7.3.5 Setting Immediate Charging 145
7.3.6 Setting the Basic Information 146
7.3.7 Setting Port Connection 147
7.3.8 Setting Communication 152
7.3.9 Viewing Device Information 153
8 Maintenance 154
8.1 Power OFF the System 154
8.2 Removing the Equipment 156
8.3 Disposing of the Equipment 157
8.4 Routine Maintenance 157
8.5 fault 159
8.5.1 Viewing Fault/Alarms Information 159
8.5.2 Fault Information and Troubleshooting 159
8.5.2.1 System Fault 160
8.5.2.2 Inverter Fault 161
8.5.2.2.1 Troubleshooting (Fault Code F01-F40) 161
8.5.2.2.2 Troubleshooting (Fault Code F41-F80) 178
8.5.2.2.3 Troubleshooting (Fault Code F81-F121) 187

8.5.2.2.4 Troubleshooting (Fault Code F122-F163) 197
8.5.2.2.5 Troubleshooting Fault Phenomena 207
8.5.2.3 Battery Fault (LX A5.0-10) 225
8.5.2.4 Battery Fault (LX A5.0-30) 227
8.5.2.5 Battery Fault (GW16.1-BAT-LV-G10) 231
9 technical parameter 235
9.1 Inverter Parameters 235
9.2 Battery Technical Data 243
9.2.1 LX A5.0-10 243
9.2.2 LX A5.0-30 245
9.2.3 GW16.1-BAT-LV-G10 247
9.3 Smart Meter Technical Data 249
9.3.1 GMK110 249
9.3.2 GM330 250
10 Appendix 252
10.1 FAQ 252
10.1.1 How to conduct auxiliary detection for smart meters/CT? 252
10.1.2 How to Upgrade the Device Version 252
10.2 Explanation of Terms 253
10.3 Battery SN Code Meaning 254
11 Contact Details 256

1 Safety Precautions

The safety precautions information contained in this document must always be followed when operating the equipment.

⚠WARNING
The device has been strictly designed and tested in compliance with safety regulations. However, as an electrical device, relevant safety instructions must be followed before performing any operations. Improper operation may result in serious injury or property damage.

1.1 General Safety

NOTICE

- Due to product version upgrades or other reasons, the document content will be updated periodically. Unless otherwise specified, the document content cannot replace the safety precautions on the product label. All descriptions in the document are for guidance only.
- Please read this document carefully before installing the equipment to understand the product and its precautions.
- All operations on the equipment must be performed by professional and qualified electrical technicians who are familiar with the relevant standards and safety regulations at the project location.
- When operating the equipment, use insulated tools and wear personal protective equipment to ensure personal safety. When handling electronic components, wear ESD gloves, ESD wrist straps, anti-static clothing, etc., to protect the equipment from electrostatic damage.
- Unauthorized disassembly or modification may cause equipment damage, and such damage is not covered by the warranty.
- Equipment damage or personal injury caused by failure to install, use, or configure the equipment in accordance with the requirements of this document or the corresponding user manual is beyond the manufacturer's liability. For more product warranty information, please obtain it through the official website: https://en.goodwe.com/warrantyrelated.html.

1.2 personnel requirements

NOTICE

To ensure safety, compliance, and efficiency throughout the entire process of equipment transportation, Installation, wiring, operation, and maintenance, all work must be performed by professionals or qualified personnel.

1. Professionals or qualified personnel include:
   - Personnel who have mastered knowledge of equipment working principles, system structure, risks, and hazards, and have received professional operation training or possess extensive practical experience.
   - Personnel who have received relevant technical and safety training, possess certain operational experience, can recognize the potential dangers specific tasks pose to themselves, and can take protective measures to minimize risks to themselves and others.
   - Qualified electrical technicians who meet the regulatory requirements of the country/region where the work is performed.
   - Personnel holding an electrical engineering degree/advanced diploma in electrical discipline or equivalent, possessing professional qualifications in the electrical field, and having at least 2/3/4 years of experience in testing and regulatory work using electrical equipment safety standards.
2. Personnel involved in special tasks such as electrical work, work at heights, and operation of special equipment must hold valid qualification certificates as required by the location of the equipment.
3. Operation of medium-voltage equipment must be performed by licensed high-voltage electricians.
4. Replacement of equipment and components is only permitted to be carried out by authorized personnel.

1.3 System Safety

⚠DANGER

- Before making electrical connections, disconnect all upstream switches of the equipment to ensure it is powered off. Live operation is strictly prohibited, otherwise hazards such as electric shock may occur.
- For equipment supporting PV string connection, the PV input terminals have weak surge current resistance. It is strictly forbidden to power on the equipment directly via the PV ports using a DC voltage source. If powering up from the PV ports is necessary, please follow the steps below. Damage caused by improper operation is considered human-induced damage and is not covered under the product warranty.
  1. First, limit the output current of the DC voltage source to within the maximum allowable input current range of the PV ports.
  2. Then, close the DC switch of the inverter.
  3. Finally, slowly increase the output voltage of the DC source from zero to the target value at a rate of ≤50V/s.
- To prevent personal injury or equipment damage caused by live operation, a circuit breaker must be added to the voltage input side of the equipment.
- All operations including transportation, storage, installation, operation, usage, and maintenance must comply with applicable laws, regulations, standards, and specification requirements.
- The specifications of cables and components used for electrical connections must comply with local laws, regulations, standards, and specification requirements.
- Please use the cable connectors provided with the equipment to connect the device cables. Damage caused by using other types of connectors is not within the responsibility of the equipment manufacturer.
- Ensure all cables of the equipment are connected correctly, securely, and without looseness. Improper wiring may cause poor contact or damage the equipment.
- The equipment's protective earth wire must be securely connected.
- To protect the equipment and its components from damage during transportation, ensure the transport personnel are professionally trained. Record the operation steps during transportation and keep the equipment balanced to avoid dropping.
- The equipment is heavy. Please allocate personnel according to the equipment's weight to prevent it from exceeding the human handling capacity, which could cause injury.
- Ensure the equipment is placed stably and not tilted. Equipment tipping over may cause equipment damage and personal injury.

⚠WARNING

- During equipment installation, avoid placing weight on the wiring terminals, otherwise the terminals may be damaged.
- If the cable is subjected to excessive tension, poor connection may result. When wiring, leave a certain length of slack in the cable before connecting it to the equipment's terminal ports.
- Cables of the same type should be bundled together. Different types of cables should be routed at least 30mm apart. Intertwining or crossing different cables is prohibited.
- Using cables in high-temperature environments may cause insulation aging or damage. Maintain a distance of at least 30mm between cables and heat-generating components or the periphery of heat source areas.

1.3.1 PV String Safety

⚠WARNING

- Ensure that component frames and bracket systems are properly grounded.
- After connecting DC cables, ensure the connections are tight and secure. Improper wiring may cause poor contact or high impedance, and damage the inverter.
- Use a multimeter to measure the positive and negative terminals of the DC cables to ensure correct polarity without reverse connection, and that the voltage is within the allowable range.
- Use a multimeter to measure the DC cables to ensure correct polarity without reverse connection; the voltage should be lower than the Max. Input Voltage. Damage caused by reverse connection and overvoltage is not covered by the manufacturer's warranty.
- PV string output does not support grounding. Before connecting PV strings to the inverter, ensure the minimum insulation resistance to ground meets the minimum insulation impedance requirement (R = Max. Input Voltage (V) / 30mA).
- Do not connect the same PV string to multiple inverters, as this may cause inverter damage.
- The PV modules used with the inverter must comply with IEC 61730 Class A standards.
- When the PV string input voltage or current is too high, it may cause the inverter output power to derate.

1.3.2 Inverter Safety

⚠WARNING

- Ensure that the voltage and frequency at the grid connection point comply with the inverter's grid-connection specifications.
- It is recommended to add protective devices such as circuit breakers or fuses on the AC side of the inverter. The rating of the protective devices should be greater than 1.25 times the maximum AC output current of the inverter.
- If the inverter triggers an arc fault alarm less than 5 times within 24 hours, the alarm can be automatically cleared. After the 5th arc fault alarm, the inverter will shut down for protection. The inverter can resume normal operation only after the fault is cleared.
- If no battery is configured in the photovoltaic system, it is not recommended to use the BACK-UP function, as it may cause a system power outage risk.
- Changes in grid voltage and frequency may cause the inverter output power to derate.

1.3.3 Battery Safety

⚠DANGER

- Before operating any equipment in the system, ensure the equipment is powered off to avoid the risk of electric shock. Strictly adhere to all safety precautions in this manual and the safety labels on the equipment during operation.
- Do not disassemble, modify, or repair the battery or control box without official authorization from the manufacturer, as this may pose an electric shock hazard or cause equipment damage. Losses resulting from such actions are beyond the manufacturer's liability.
- Do not impact, pull, drag, squeeze, or step on the equipment, and do not place the battery in fire, as this may cause the battery to explode.
- Do not place the battery in high-temperature environments. Ensure there are no heat sources near the battery and that it is not exposed to direct sunlight. A fire may occur if the ambient temperature exceeds 60℃.
- Do not use the battery or control box if there are obvious defects, cracks, damage, or other abnormalities. Battery damage may lead to electrolyte leakage.
- Do not move the battery system while it is operating. If battery replacement or addition is required, please contact the after-sales service center.
- Battery short circuits may cause personal injury. The instantaneous high current from a short circuit can release a large amount of energy, potentially leading to a fire.
- The battery DC circuit breaker should comply with the requirements of the AS/NZS 5139 standard.

⚠WARNING

- Battery current may be affected by factors such as temperature, Humidity, weather conditions, etc., which may lead to battery current limiting and affect load capacity.
- If the battery fails to start, please contact the after-sales service center as soon as possible. Otherwise, the battery may be permanently damaged.
- Please perform regular inspection and maintenance on the battery according to its maintenance requirements.

Emergency Response Measures

- Battery electrolyte leakage
  If the battery module leaks electrolyte, avoid contact with the leaked liquid or gas. The electrolyte is corrosive, and contact may cause skin irritation and chemical burns. If accidental contact occurs with the leaked substance, perform the following actions:
  - inhalation: Evacuate from the contaminated area and seek medical help immediately.
  - Eye contact: Rinse with clean water for at least 15 minutes and seek medical help immediately.
  - Skin contact: Wash the affected area thoroughly with soap and water and seek medical help immediately.
  - Ingestion: Induce vomiting and seek medical assistance immediately.
- Fire
  - When the battery temperature exceeds 150°C, there is a risk of fire, and the battery may release toxic and harmful gases after catching fire.
  - To prevent fires, ensure that there are carbon dioxide, Novec1230, or FM-200 fire extinguishers near the equipment.
  - When extinguishing fires, do not use ABC dry powder fire extinguishers. Firefighters must wear protective clothing and self-contained breathing apparatus.
- Battery triggers fire protection
  For batteries equipped with fire protection functions, after the fire protection function is triggered, perform the following actions:
  - Immediately cut off the main power switch to ensure no current flows through the battery system.
  - Conduct a preliminary visual inspection of the battery for any damage, deformation, leakage, or unusual odor. Check the battery casing, connectors, and cables.
  - Use temperature sensors to detect the temperature of the battery and its environment to ensure there is no risk of overheating.
  - Isolate and label the damaged battery, and dispose of it properly according to local regulations.

1.3.4 Smart Meter Safety

⚠WARNING

If the grid voltage fluctuation exceeds 265V, long-term overvoltage operation may cause damage to the electricity meter. It is recommended to add a fuse with a rated current of 0.5A on the voltage input side of the meter to protect it.

1.4 Safety Symbols and Certification Marks

⚠DANGER

- After installation, the labels and warning signs on the enclosure must be clearly visible and must not be obscured, altered, or damaged.
- The following descriptions of warning labels on the enclosure are for reference only. Please refer to the actual labels used on the device.

No.	Symbol	Meaning
1		Potential hazard exists during equipment operation. Take protective measures when operating the equipment.
2	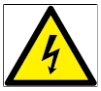	High voltage hazard. High voltage is present during equipment operation. Ensure the equipment is powered off before performing any operations.
3		The inverter surface is at a high temperature. Do not touch during operation to avoid burns.
4		Use the equipment properly. There is a risk of explosion under extreme conditions.
5		The battery contains flammable materials. Beware of fire.

No.	Symbol	Meaning
6		The equipment contains corrosive electrolyte. Avoid contact with leaked electrolyte or vapor.
7		Delayed discharge. After powering off the equipment, wait for 5 minutes until it is completely discharged.
8		Keep the equipment away from open flames or ignition sources.
9		Keep the equipment out of reach of children.
10		Do not extinguish with water.
11		Read the product manual carefully before operating the equipment.
12		Wear personal protective equipment during installation, operation, and maintenance.
13		Do not dispose of the equipment as household waste. Dispose of it according to local laws and regulations, or return it to the manufacturer.
14		Grounding point.
15		Recycling symbol.

No.	Symbol	Meaning
16		CE marking.
17		TUV mark.
18		RCM mark.

2 System Introduction

2.1 System Overview

The residential Smart Inverter solution integrates devices such as the inverter, Battery, Smart Meter, and smart communication stick. Within the photovoltaic system, it converts solar energy into electricity to meet household power demands. The energy IoT devices in the system manage electrical appliances by identifying the overall power situation in the system, thereby achieving intelligent management of electricity for supplying loads, storing to the Battery, etc.

⚠WARNING

- Select the battery model according to the inverter and battery compatibility list. For requirements on batteries used in the same system, such as whether models can be mixed and whether capacities must be consistent, please refer to the user manual of the corresponding battery model or contact the battery manufacturer for relevant requirements. Inverter and battery compatibility list: https://en.goodwe.com/Ftp/EN/Downloads/User%20Manual/GW_Battery%20Compatibility%20Overview-EN.pdf.
- Due to product version upgrades or other reasons, the document content will be updated periodically. For the compatibility relationship between inverters and IoT products, please refer to: https://en.goodwe.com/Ftp/EN/Downloads/User%20Manual/GW_Compatibility-list-of-GoodWe-inverters-and-IoT-products-EN.pdf.
- For detailed networking and wiring schemes for various scenarios, please refer to: Detailed System Wiring Diagram.
- The energy storage system is not suitable for connecting devices that rely on stable power supply, such as life-sustaining medical equipment, etc. Please ensure that system power failure does not lead to personal injury.
- In a system where the inverter operates completely off-grid, if the battery experiences prolonged low sunlight or rainy weather and fails to replenish power in time, it may lead to over-discharge, causing battery performance degradation or damage. To ensure long-term stable system operation, avoid completely draining the battery. Recommended measures are as follows:
  1. When operating off-grid, set the minimum SOC protection threshold. It is recommended to set the off-grid battery SOC lower limit to 30%.
  2. When the SOC approaches the protection threshold, the system will automatically enter load limiting or protection mode.
  3. If there is insufficient sunlight for several consecutive days and the battery SOC is too low, promptly replenish the battery using an external energy source (such as a generator or grid-assisted charging).
  4. Regularly check the battery status to ensure it operates within a safe working range.
  5. It is recommended to perform a full charge and discharge cycle on the battery every six months to calibrate SOC accuracy.

Off-grid Load Capacity Description		
Inverter Model	GW3K-EO-G20 GW3.6K-EO-G20	GW5K-EO-G20 GW6K-EO-G20
Single Inductive Load Rated Power (kVA)	0.8	1.5
Total Inductive Load Rated Power (kVA)	0.75*Pn	0.75*Pn
Capacitive Load (kVA)	0.33*Pn	0.33*Pn
Half-wave Load	0.5*Pn	0.5*Pn

Note:

- Pn: Inverter rated output power.
- For 2 or more units in parallel, the allowed total inductive load rated power = single inductive load rated power * number of parallel units * 80%.
- Half-wave load: Some older or non-EMC compliant household appliances (e.g., hair dryers, small heaters using half-wave rectification).
- If the calculated total rated power of multiple inductive loads is less than the rated power of a single maximum inductive load, the total load rated power is taken as that single rated power.
- It is recommended to use a frequency converter when operating inductive loads.

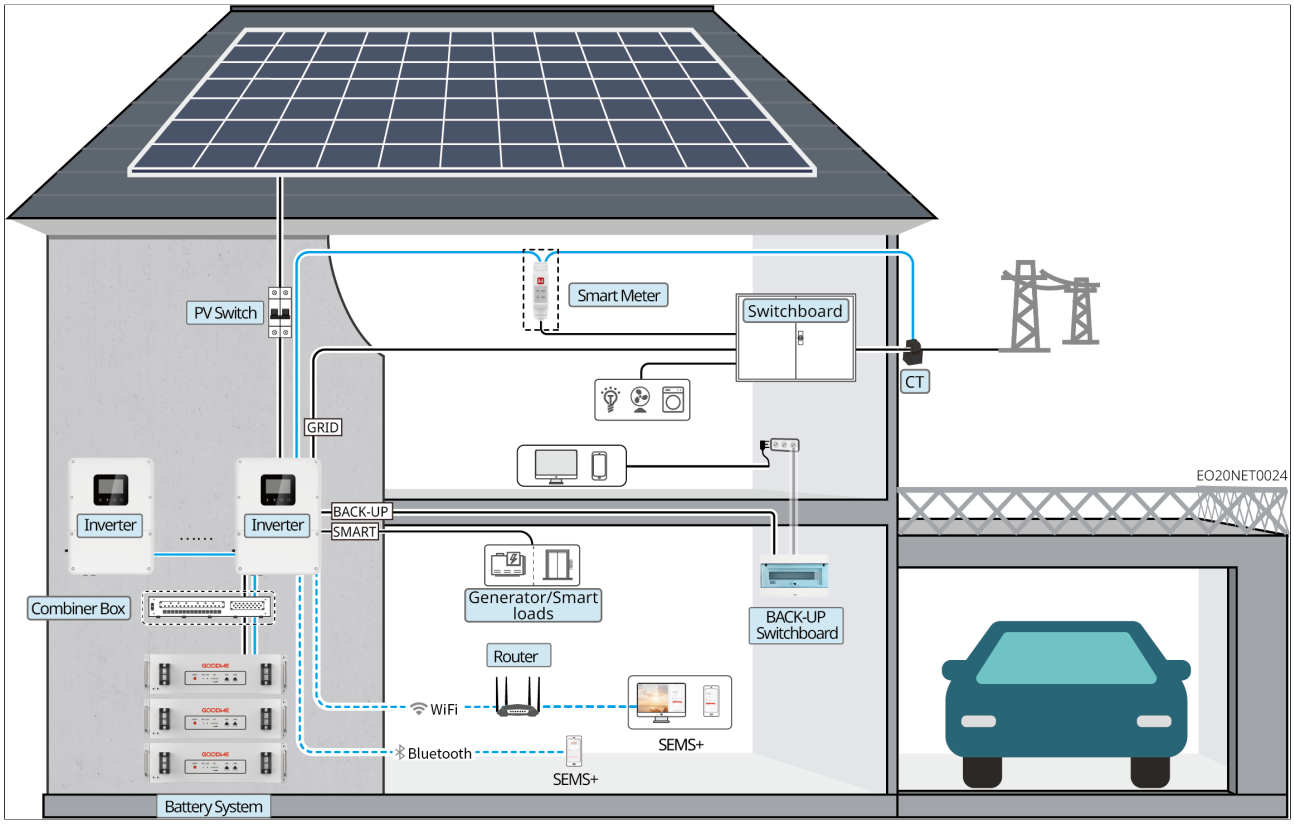

Device Type	model	Description
Inverter	GW3K-EO-G20 GW3.6K-EO-G20 GW5K-EO-G20 GW6K-EO-G20	• Supports connection to a generator or smart load. • Supports up to 10 inverters forming a parallel system. Supports mixing different power ranges. • For the inverter to be compatible with the GW16.1-BAT-LV-G10 battery and support parallel function, the software version requirements are: ◦ Inverter ARM software version 02.128 or above ◦ Inverter DSP software version 02.33 or above
Battery system	LX A5.0-10	
	LX A5.0-30	

Device Type	model	Description
	GW16.1-BAT-LV-G10	• Battery systems of different models cannot be mixed and used together. • Cluster expansion between different models is currently not supported. For the same model, cluster expansion is allowed within one year of customer purchase and use; it is not allowed after one year. • LX A5.0-10: Supports a maximum of 15 units in parallel per cluster within the same system. • LX A5.0-30: Supports a maximum of 30 units in parallel per cluster within the same system. • GW16.1-BAT-LV-G10: Supports a maximum of 30 units in parallel per cluster within the same system.
	Lead-acid Battery	• Supports connection to AGM, GEL, and Flooded type lead-acid batteries. • Calculate the number of batteries that can be connected in series based on the lead-acid battery voltage. The total voltage of the series-connected batteries must not exceed 60V.

Device Type	model	Description
Combiner Box	BCB-11-WW-0 BCB-22-WW-0 BCB-32-WW-0 (Purchased from GoodWe)	• A combiner box can be chosen for connection when multiple batteries are used in the system. If using batteries from other brands, please consult the corresponding manufacturer for the connection method between the batteries and the busbar. • When the system uses a busbar / combiner box to interconnect batteries and inverters, the rated current-carrying capacity of the combiner box should not be less than the sum of the maximum input and output currents of all battery ports on the inverter side. • BCB-11-WW-0: Used with LX A5.0-10, supports a maximum working current of 360A, maximum connection of 6 batteries and 3 inverters. • BCB-22-WW-0: ◦ Used with LX A5.0-10, supports a maximum working current of 720A, maximum connection of 12 batteries and 6 inverters. ◦ Used with LX A5.0-30, supports a maximum working current of 720A, maximum connection of 6 batteries and 6 inverters. • BCB-32-WW-0: ◦ Used with LX A5.0-10, supports a maximum working current of 720A, maximum connection of 12 batteries and 6 inverters. ◦ When used with LX A5.0-30 and GW16.1-BAT-LV-G10, supports a maximum working current of 720A, 15 batteries, and 6 inverters. • Others: Please configure according to system power and current.
Smart Meter	Built-in meter (standard-equipped)	CTs can be purchased from distributors or separately. CT ratio requirement: 120A:40mA

Device Type	model	Description
	GMK110 (Purchased from distributor)	• When the length of the built-in inverter CT cable is insufficient to connect to the distribution board, it can be extended by connecting an external GMK110 meter. • GMK110: CT cannot be replaced, CT ratio: 120A/40mA
	GM330 (Purchased from distributor)	GM330: CTs can be purchased from GoodWe or separately. CT ratio requirement: nA/5A • nA: CT primary side input current, where n ranges from 200 to 5000 • 5A: CT secondary side output current
Smart Load		Supports SG Ready. Smart load specifications require: 1. Total smart load power < Maximum output power of the SMART port 2. Smart load power + BACK-UP power < Maximum AC input power (Utility grid)
Generator		Generator rated voltage must meet the inverter SMART port rated voltage.

2.2 Product Overview

2.2.1 Inverter

Off-grid inverters control and optimize energy flow in photovoltaic systems through an integrated energy management system. They can supply the electricity generated by the PV system to loads or store it in batteries.

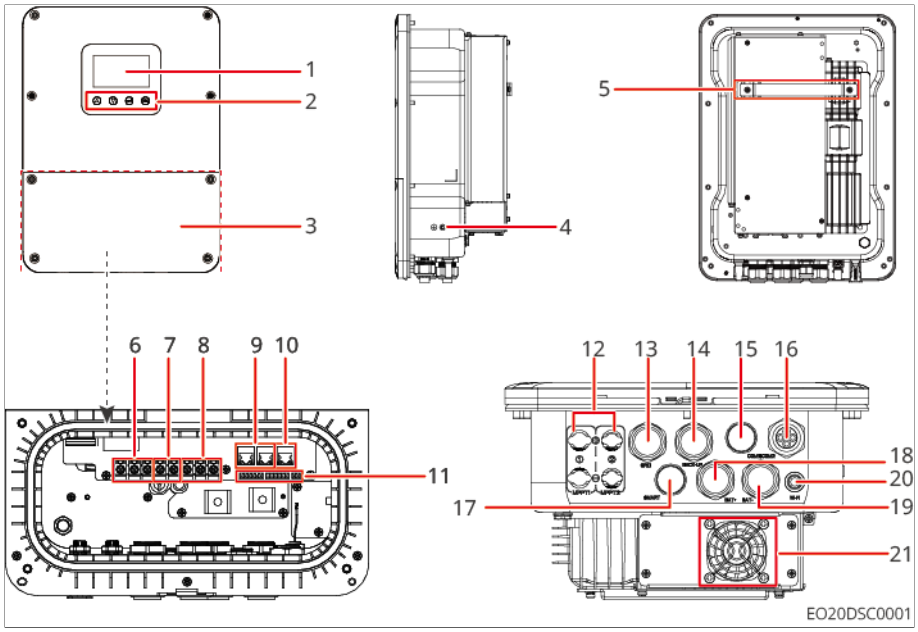

Figure1 Inverter Component Introduction

No.	model	Nominal output power	Nominal output voltage
1	GW3K-EO-G20	3kW	220/230V
3	GW3.6K-EO-G20	3.6kW	220/230V
4	GW5K-EO-G20	5kW	220/230V
5	GW6K-EO-G20	6kW	220/230V

No.	Component/Silkscreen	Description
1	Display Screen	View inverter-related data
2	Buttons	Used in conjunction with the display screen to configure the inverter
3	Inverter Chassis Lower Cover	-
4	Grounding terminal/PE	Connecting the PE cable
5	Mounting Bracket	Used for mounting the inverter
6	Grid Port/GRID	Connect AC cables to link the inverter to the grid
7	SMART Port	For connecting a generator or large loads

No.	Component/Silkscreen	Description
8	BACK-UP Port	Connect AC cables to link critical loads to the inverter
9	Parallel Communication Port	For inverter parallel communication
10	Battery Communication Port	Connect battery communication cable
11	Communication Port	Can connect communication cables for load control, CT, RS485, Remote Shutdown/Rapid Shutdown, etc.
12	PV Cable Connection Port	Can connect PV module DC input cables. GW3K-EO-G20, GW3.6K-EO-G20: x 1 GW5K-EO-G20, GW6K-EO-G20: x 2
13	GRID	Grid cable outlet
14	BACK-UP	BACK-UP Loads cable outlet
15	COM1	Communication cable outlet
16	COM2	Parallel communication and battery communication cable outlet
17	SMART	Generator or large load cable outlet
18	BAT+	Battery positive power cable outlet
19	BAT-	Battery negative power cable outlet
20	antenna	Enhances inverter communication signal
21	Fan	Used for inverter heat dissipation

Dimensions Introduction

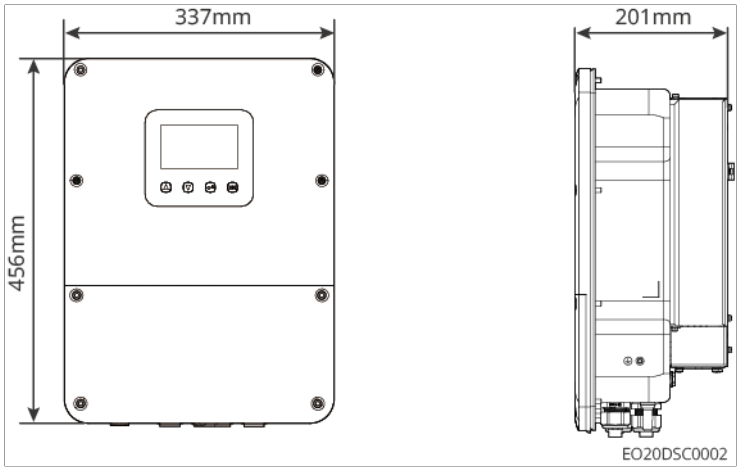

Figure2 Inverter Dimensions

2.2.2 Battery

The battery system can store and release electrical energy according to the requirements of the photovoltaic energy storage system. The input and output ports of this energy storage system are both high-voltage direct current. The inverter supports use with lead-acid batteries. Please obtain relevant product information for lead-acid batteries from the lead-acid battery manufacturer.

2.2.2.1 LX A5.0-10

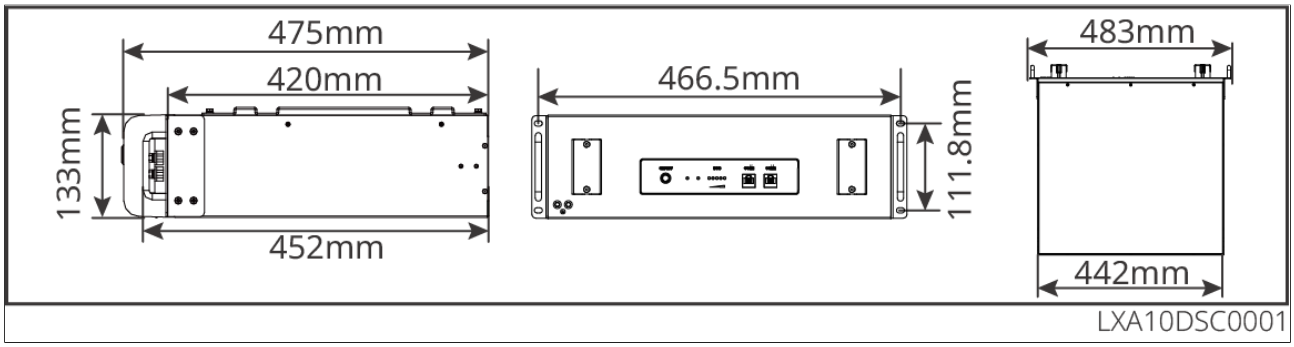

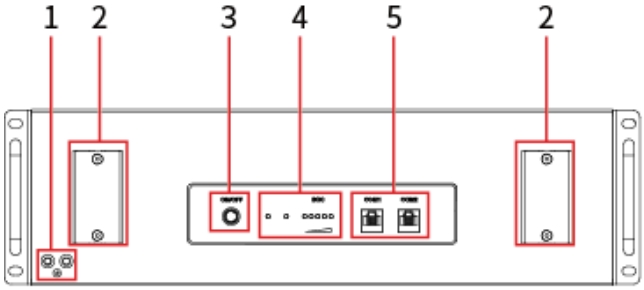

LXA10DSC0002

No.	Component/Silk screen	Description
1	Grounding terminal	Connect the chassis ground wire.
2	Battery DC port	Connect the battery DC input cable.
3	Battery system button	Used for battery power on/off and black start.
4	indicator	Indicates the battery's operating status.
5	Communication Port	Connect the battery communication cable.

2.2.2.2 LX A5.0-30

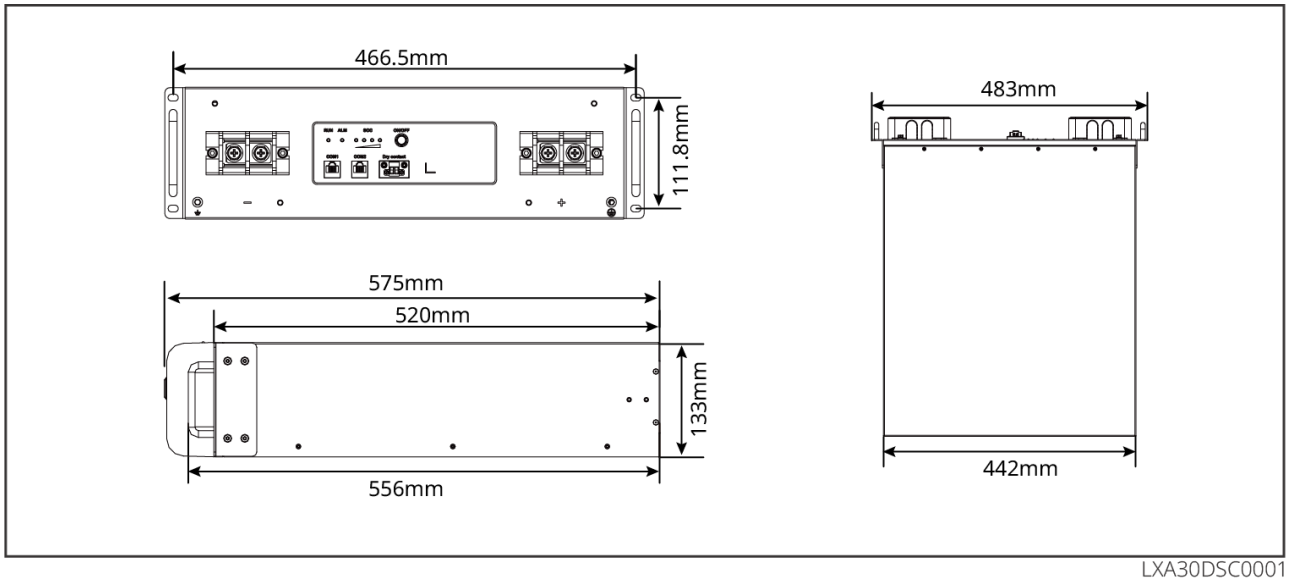

LXA30DSC0001

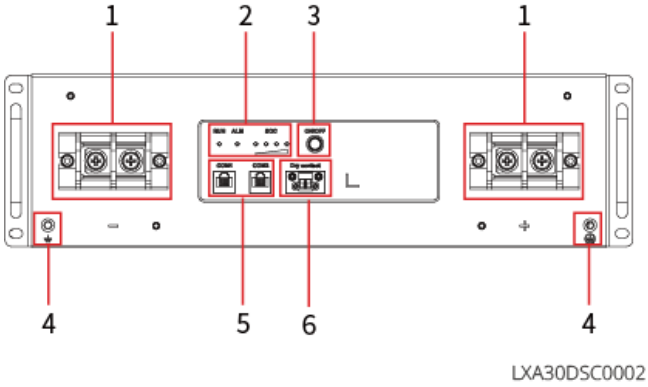

No.	Component/Silk screen	Description
1	Battery DC port	Connect the battery DC input cable.
2	indicator	Indicates the operating status of the battery.
3	Battery system button	Used for battery power on/off and black start.
4	Grounding terminal	Connect the chassis protective ground wire.
5	Communication Port	Connect the battery communication cable.
6	Dry contact	Reserved.

2.2.2.3 GW16.1-BAT-LV-G10

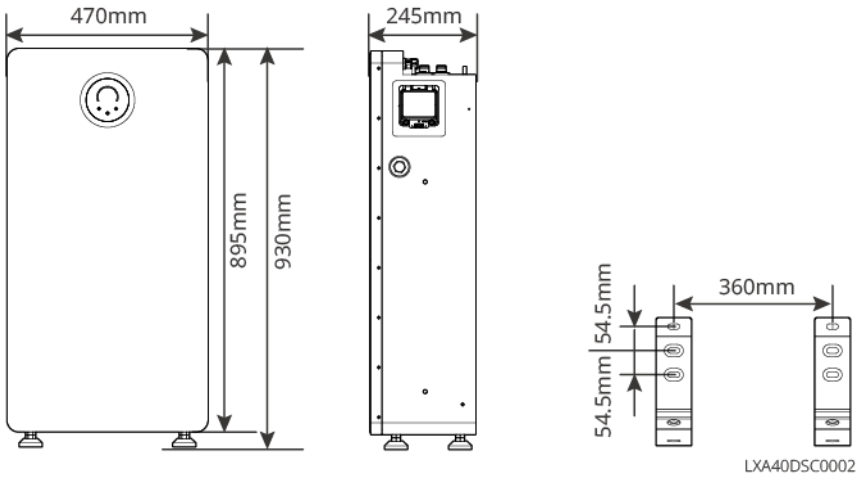

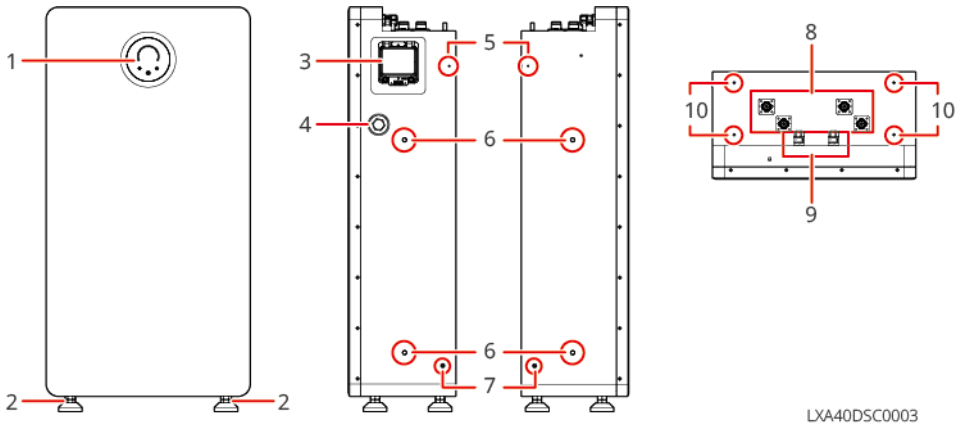

No.	Component/Silk screen	Description
1	indicator	Indicates the operating status of the battery.
2	Foot	Supports the battery.
3	Battery circuit breaker	Used for powering the battery on and off.
4	Explosion-proof breather valve	Balances internal and external air pressure of the battery, providing explosion protection.
5	Anti-tip bracket fixing hole	Used for securing the battery to the wall.
6	Lifting rod mounting hole	Used for installing the lifting rod. Used during manual battery handling.
7	Grounding terminal	Connects the protective ground wire for the enclosure.
8	Battery DC port	Connects the battery DC input cable.
9	Communication Port	Connects the battery communication cable.
10	Decorative cover mounting hole	Used for securing the battery decorative cover.

2.2.3 Smart Meter

The Smart Meter can measure and monitor the electrical data in the photovoltaic energy storage system, such as: voltage, current, frequency, power factor, power, etc.

GMK110 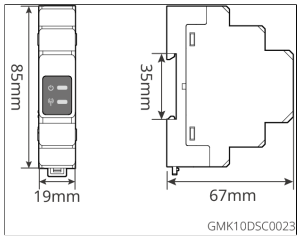 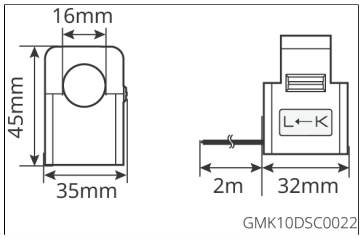	GM330 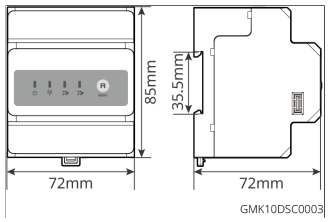

No.	model	Applicable Scenarios
1	GMK110	CT does not support replacement, CT ratio: 120A: 40mA
2	GM330	CT supports purchase from GoodWe or self-purchase, CT ratio requirement: nA: 5A • nA: CT primary side input current, n ranges from 200 to 5000 • 5A: CT secondary side output current

2.3 Supported Grid Types

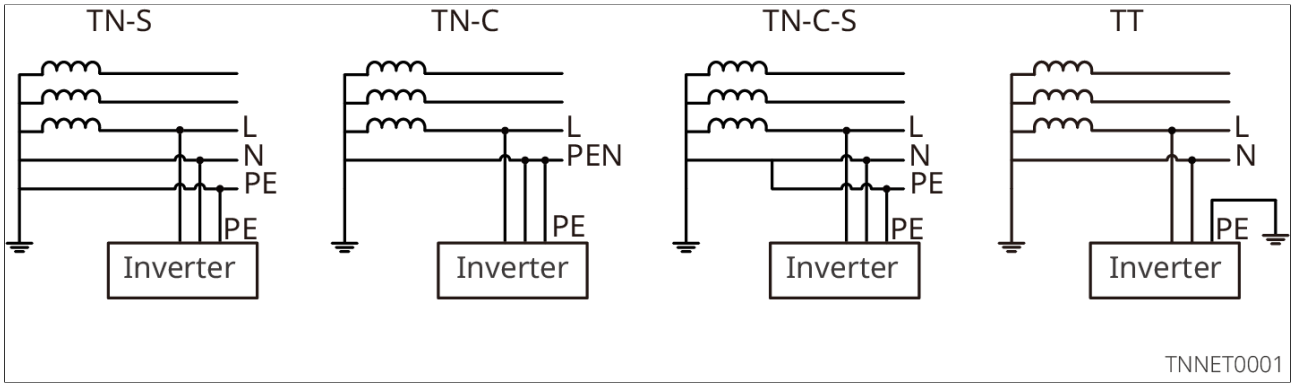

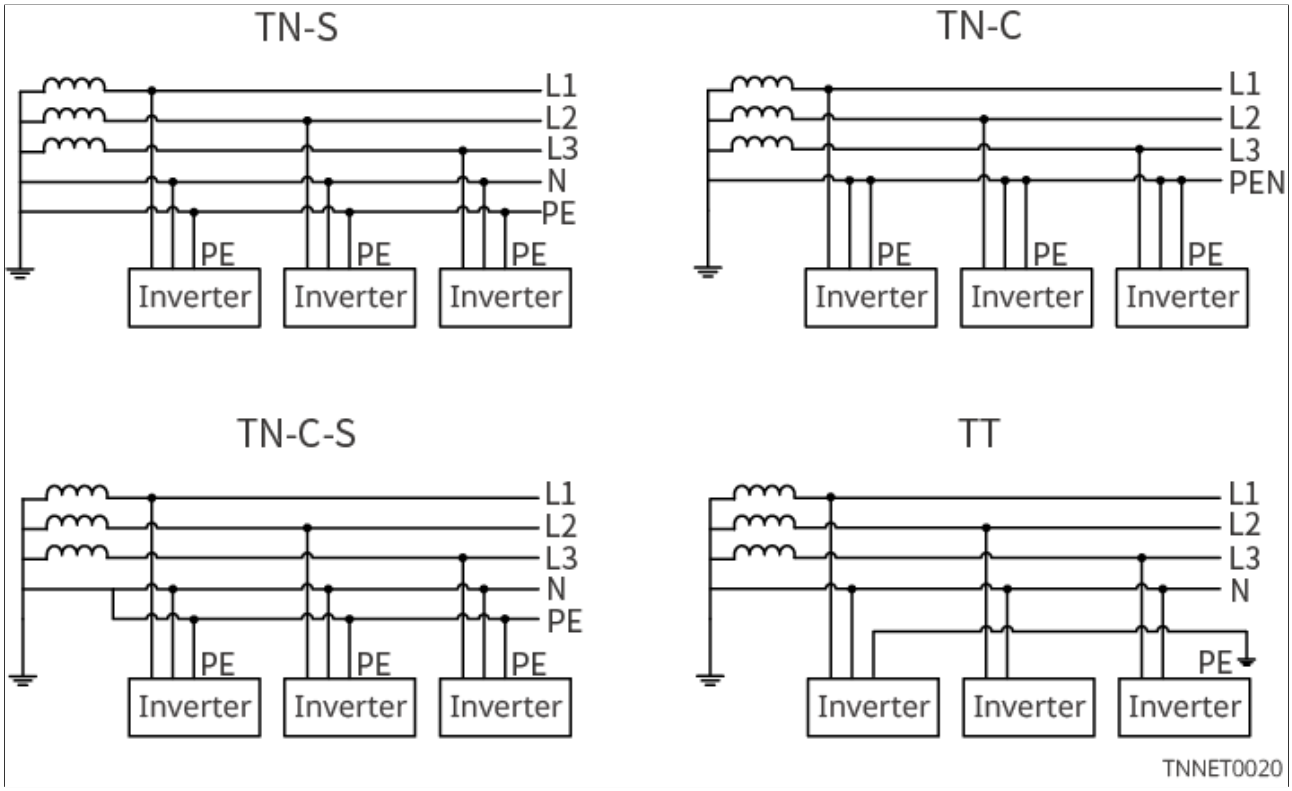

2.4 System Working Mode

Self-consumption

- The basic operating mode of the system.
- PV power generation is prioritized to supply the loads, with excess power charging the battery. When PV generation cannot meet the load demand, the battery supplies power to the loads. When the battery power is also insufficient to meet the load demand, the grid supplies power to the loads.

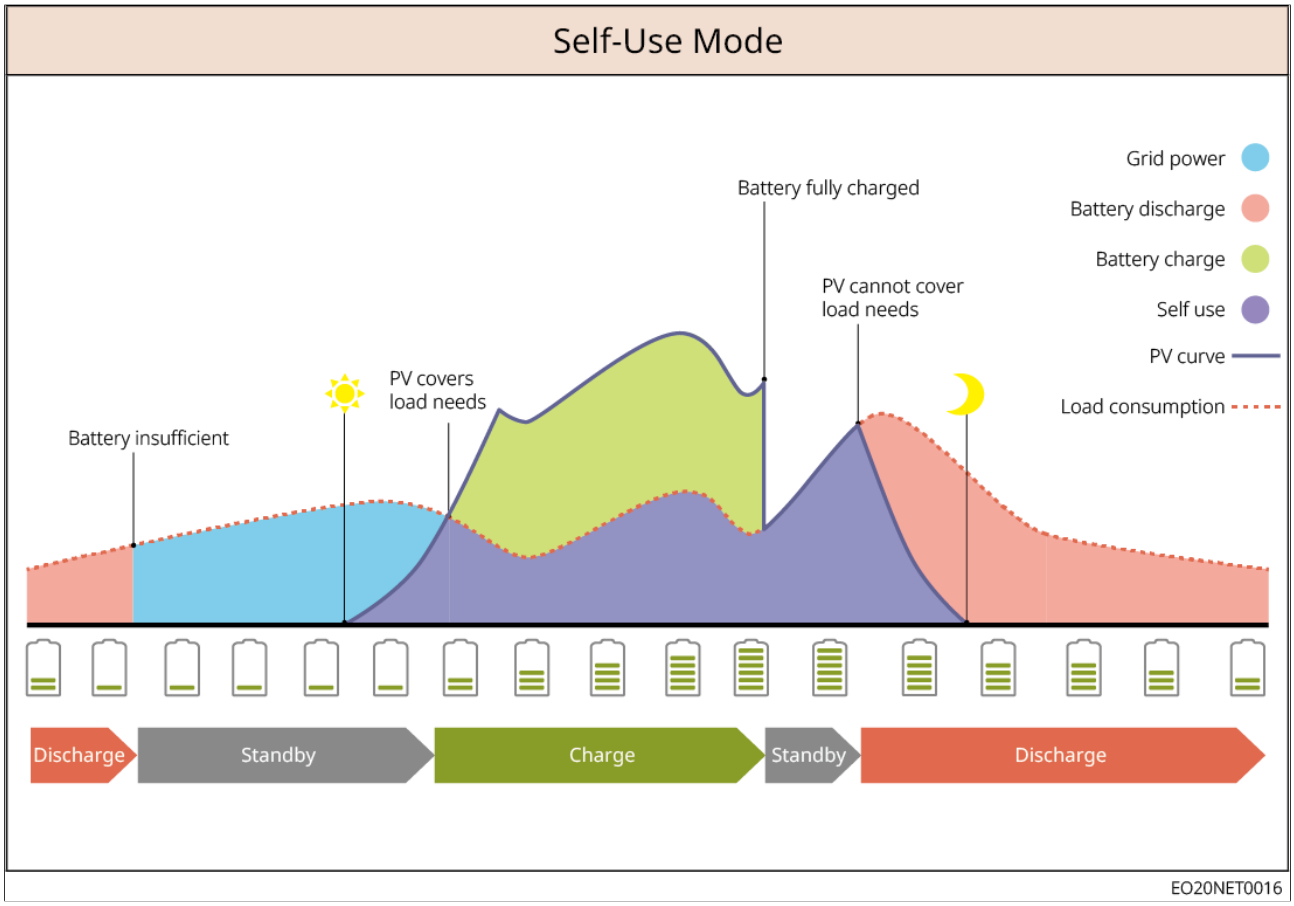

Backup Mode

- Recommended for use in areas with unstable grid power.
- When the grid power fails, the inverter switches to off-grid operation mode, and the battery discharges to supply power to the loads, ensuring uninterrupted power for the BACK-UP Loads. When grid power is restored, the inverter switches its operation mode back to grid-tied.
- To ensure the battery State of Charge (SOC) is sufficient to maintain normal system operation during off-grid periods, the system will charge the battery to the Backup Power SOC using PV power or by purchasing power from the grid during grid-tied operation. If purchasing power from the grid to charge the battery, please ensure it complies with local grid laws and regulations.

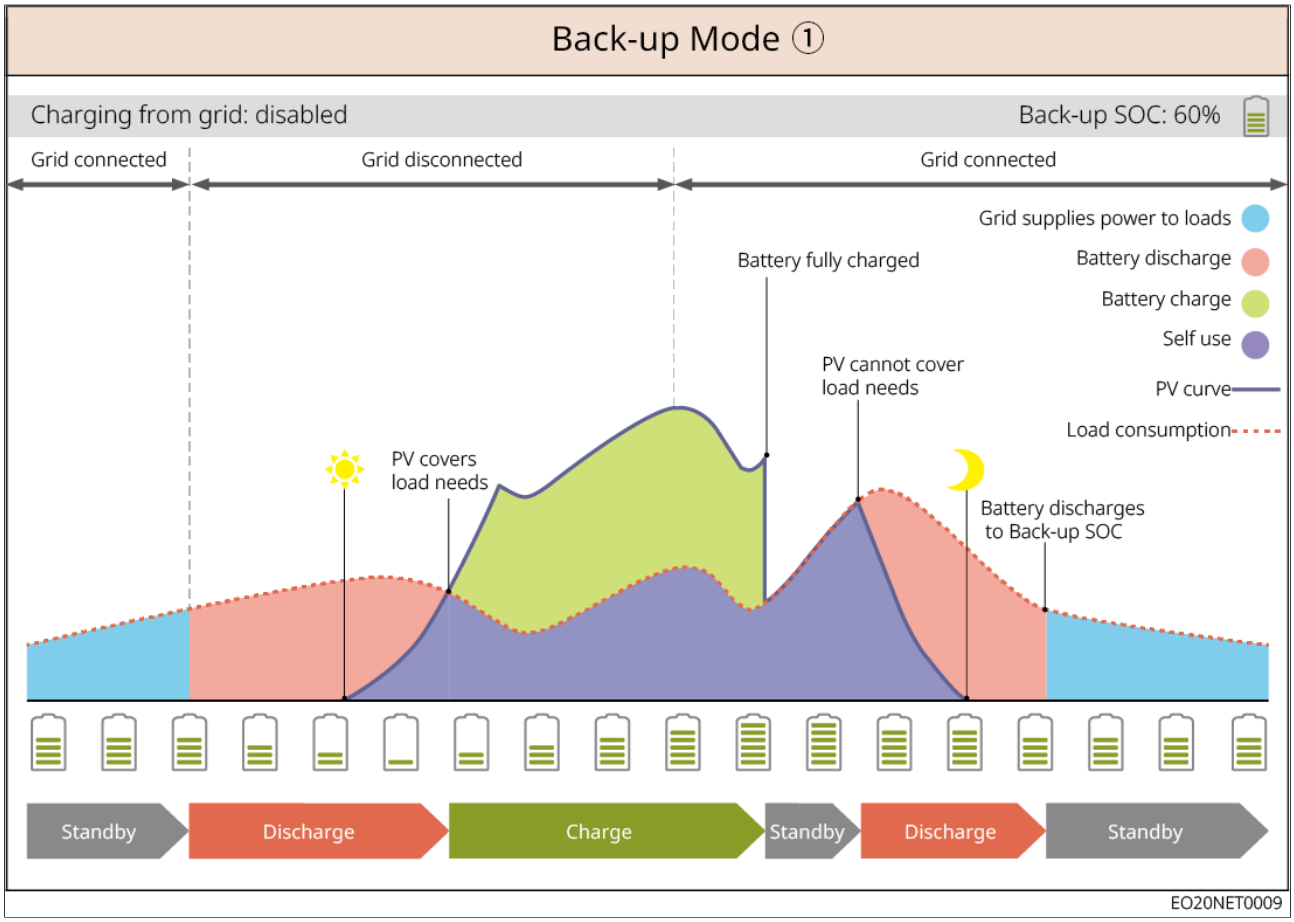
Back-up Mode ①
Charging from grid: disabled
Back-up SOC: 60%
Grid connected
Grid disconnected
Grid connected
Grid supplies power to loads
Battery discharge
Battery charge
Self use
PV curve
Load consumption
Battery fully charged
PV cannot cover load needs
PV covers load needs
Battery discharges to Back-up SOC
Standby
Discharge
Charge
Standby
Discharge
Standby
EO20NET0009

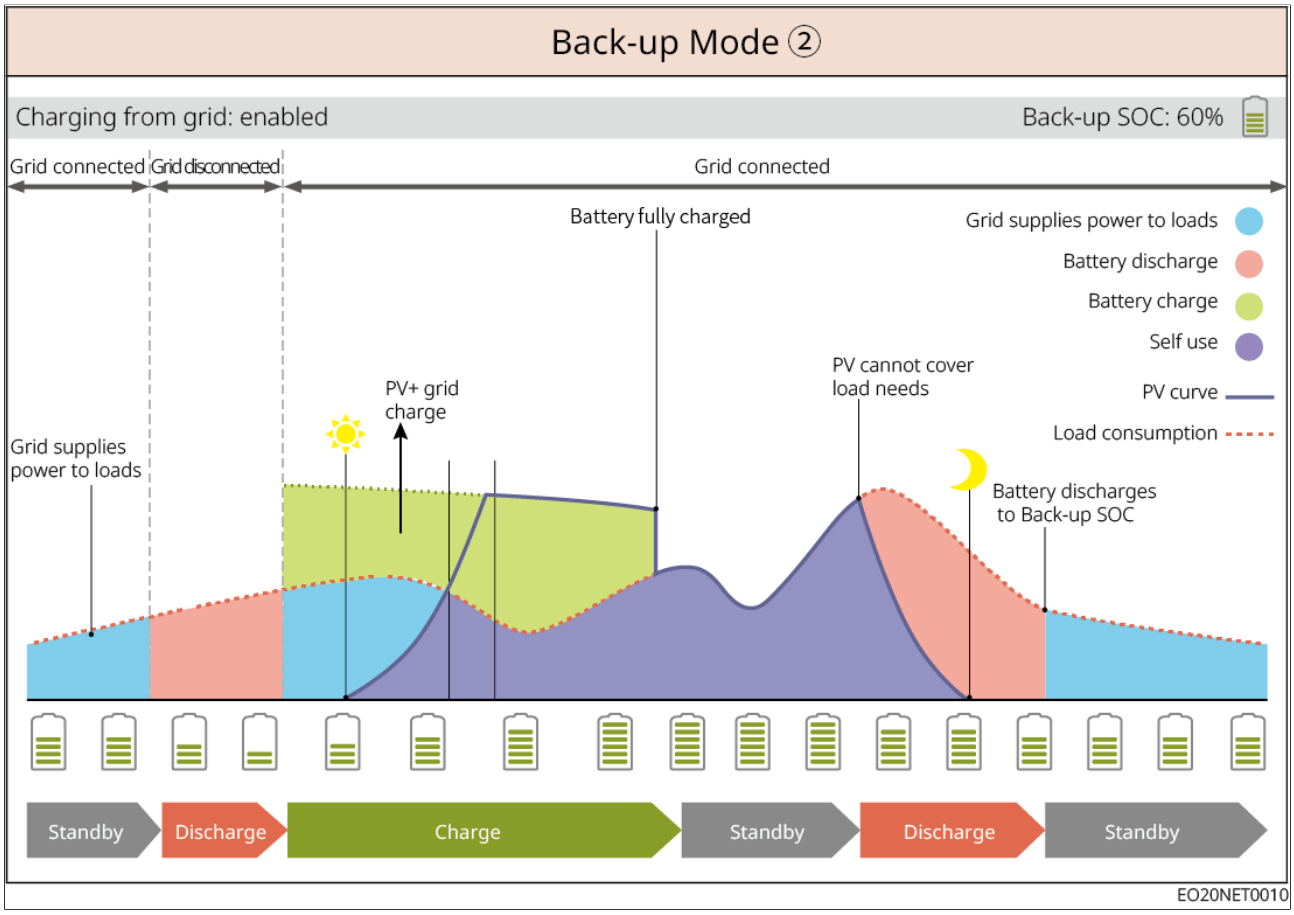

TOU Mode

Subject to compliance with local laws and regulations, electricity purchase from the grid is scheduled for different time periods based on peak and off-peak electricity price differences.

For example: During off-peak (valley) price periods, set the battery to charging mode to purchase power from the grid for charging. During peak price periods, set the battery to discharging mode to supply power to the loads via the battery.

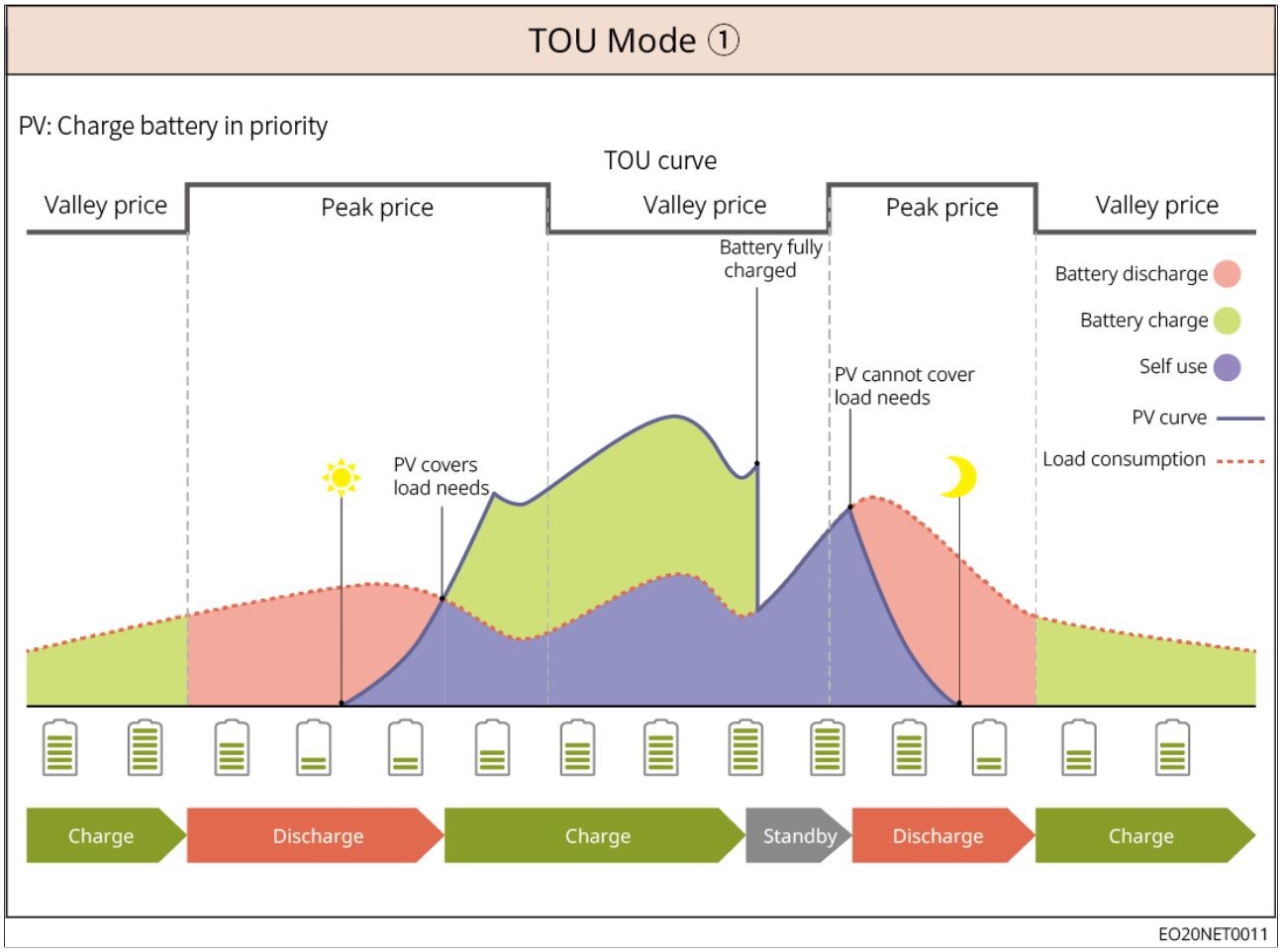

Off-grid Mode

NOTICE
Do not operate in pure off-grid mode when the inverter is not connected to the battery system.

When grid power fails, the inverter switches to off-grid operation mode.

- During the day, PV power generation is prioritized to supply the loads, with excess power charging the battery.
- At night, the battery discharges to supply power to the loads, ensuring uninterrupted power for the BACK-UP Loads.

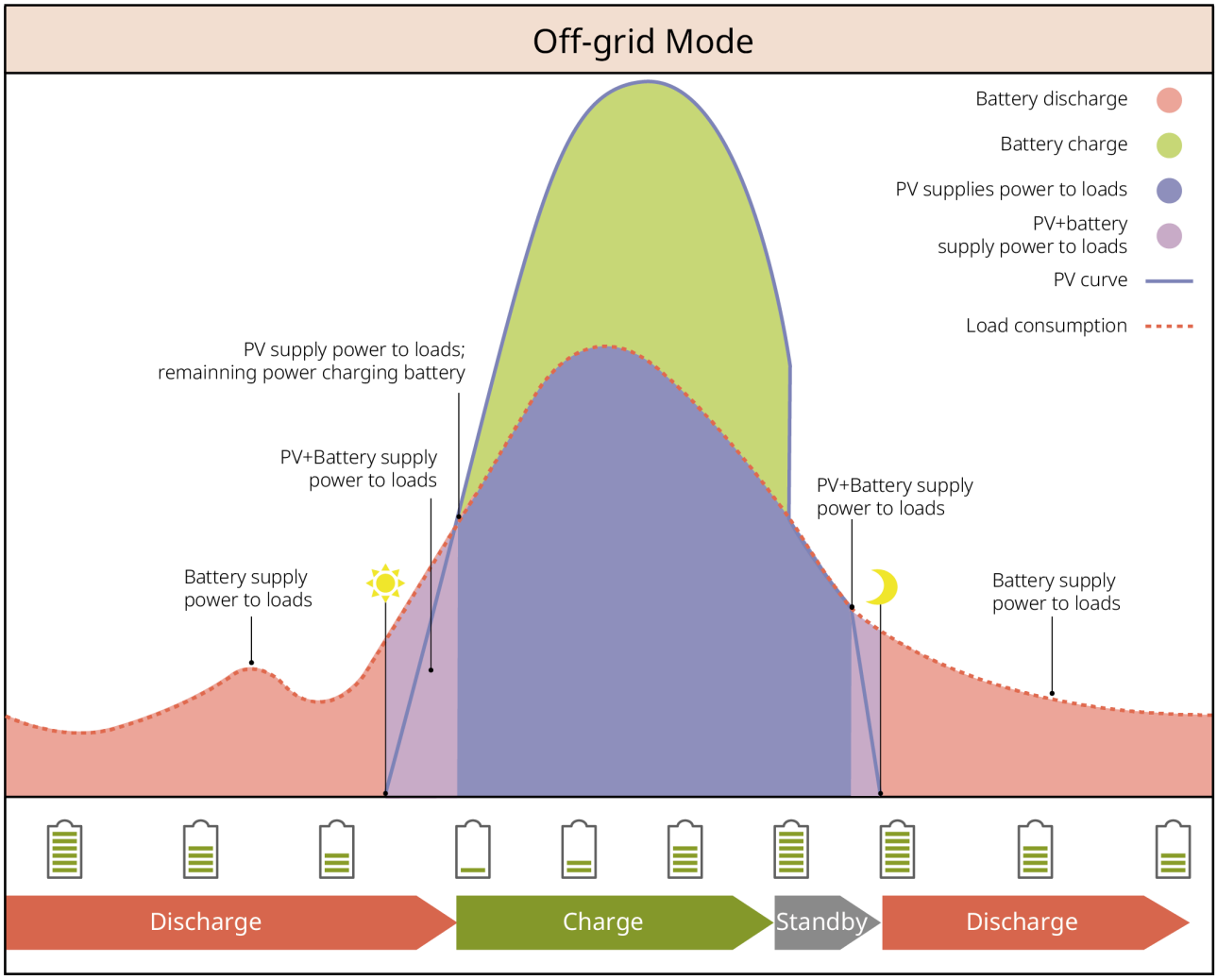

SLG00NET0012

2.5 Features

load control

The inverter's dry contact control port supports connecting additional contactors to control the load on or off. Supports household loads, heat pumps, etc.
The load control methods are as follows:

- Dry Contact Mode: When the switch status is selected as ON, start supplying power to the load; when the switch status is set to OFF, stop supplying power to the load. Please set the switch status to ON or OFF according to actual needs.
- Time Mode: Within the set time period, the load will automatically supply power to the load or cut off power. Standard mode or smart mode can be selected.
- SOC Mode: The inverter has a built-in relay dry contact control port, which can control whether to supply power to the load. In off-grid mode, if BACK-UP port,

Smart port overload is detected or battery SOC protection function is triggered, it can stop supplying power to the load connected to the port.

Diesel Generator Control

When the inverter supports the diesel generator control function, it can control the start and stop of the diesel generator via the App or LCD screen.

- No diesel generator connected: When no diesel generator is connected to the energy storage system, please select no diesel generator connected.
- Manual control of diesel generator (dry contact connection not supported): The start and stop of the diesel generator need to be controlled manually, the inverter cannot control the start and stop of the diesel generator.
- Automatic control of diesel generator (dry contact connection supported): When the diesel generator has a dry contact control port and is connected to the inverter, the inverter's diesel generator control mode needs to be set to switch control mode or automatic control mode.
  - Switch control mode: When the switch status is turned on, the diesel generator works; the diesel generator can automatically stop working after running for the set time.
  - Automatic control mode: During the set prohibited working time period, the diesel generator is prohibited from working; during the running time period, the diesel generator works.

3 Check and Storage

3.1 Check Before Receiving

Before signing for the product, please carefully check the following:

1. Check the outer packaging for any damage, such as deformation, holes, cracks, or any other signs that could indicate damage to the equipment inside the box. If damage is found, do not open the packaging and contact your distributor.
2. When removing the GW16.1-BAT-LV-G10 battery, ensure the cardboard packaging box remains intact. If the packaging is accidentally damaged and you need to process a return or exchange due to product quality issues, please contact Growatt after-sales service or your distributor to obtain a dedicated packaging box.
3. Check if the device model is correct. If it does not match, do not open the packaging and contact your distributor.

3.2 deliverables

⚠WARNING
Check if the type and quantity of the delivered items are correct, and if there is any damage to the appearance. If there is any damage, please contact your dealer. After the delivered items are taken out of the packaging, do not place them on rough, uneven, or sharp surfaces to avoid paint chipping.

3.2.1 Inverter Deliverables

Component	Description	Component	Description
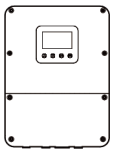	Inverter x1	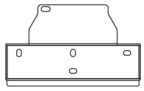	mounting plate x1
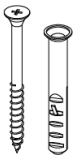	Expansion screw x4		Grounding terminal x 1

Component	Description	Component	Description
	Battery power connection terminal x 2		Battery terminal fastening screw
	PV DC wiring terminal • GW3K-EO-G20, GW3.6K-EO-G20: x 1 • GW5K-EO-G20, GW6K-EO-G20: x 2		Communication tubular terminal x 16
	2PIN communication terminal x 1		6PIN communication terminal x 2
	AC tubular terminal x 8		Flathead screwdriver x 1
	Communication outlet waterproof plug x 1		BMS communication cable x 1
	PV terminal fastening/unlocking tool x 1		Product documentation x 1
	Hex screwdriver x 1	-	-

3.2.2 Batteries Deliverables

3.2.2.1 LX A5.0-30

Part	Description	Part	Description
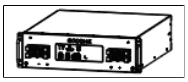	Battery Module x 1	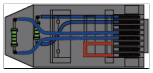	Terminal resistor x 1 This terminal resistor must be installed on the battery when connecting to a third-party bus.
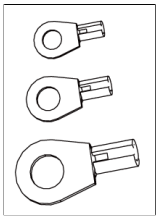	• M5 OT terminal x 2: Recommended for connecting 10mm^2 cable • M8 OT terminal x 4: Recommended for connecting 50mm^2 cable • M10 OT terminal x 2: Recommended for connecting 70mm^2 cable	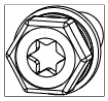	M5*12 Grounding screw x 2
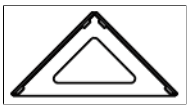	Mounting Bracket x 2 Included when wall-mounted installation is selected.	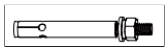	M6*70 Expansion Bolt x 4 Included when wall-mounted installation is selected.
	M5*12 Grounding screw x 2 Included when wall-mounted installation is selected.	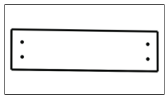	Marking Template x 1 Included when wall-mounted installation is selected.
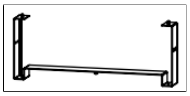	Battery Bracket x 2 (Optional) Included when stacked installation is selected.	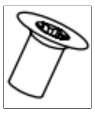	M4*8 screw x 8 Included when stacked installation is selected.

Part	Description	Part	Description
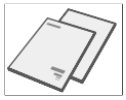	Product Documentation x 1		Negative Power Cable (Optional) x 1
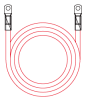	Positive Power Cable (Optional) x 1	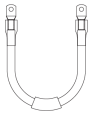	Grounding Cable (Optional) x 1
	Communication cable (Optional) x 1		Decorative Cover (Optional) x 1

3.2.2.2 LX A5.0-10

Part	Description	Part	Description
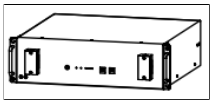	Battery module x 1	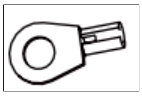	(25-8) power line OT terminal x 4 (5.5-5) ground OT terminal x 2
	M5 ground screw x 2		Warning label x 1
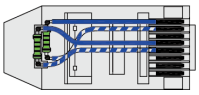	Terminal resistor x 1		Electrical label x 1
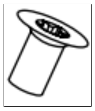	M4*8 screw x 8 (optional) Issued when bracket installation method is selected	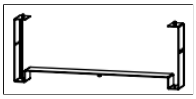	Battery bracket x 2 (optional) Issued when bracket installation method is selected

Part	Description	Part	Description
	Product documentation x 1		Negative power line (optional) x 1
	Positive power line (optional) x 1		Ground wire (optional) x 1
	Communication cable (optional) x 1		Decorative cover (optional) x 1
	Back mount expansion screw (optional) x 4		Back mount (optional) x 1
	Mount (optional) x 1		Mount screw (optional) x 4

3.2.2.3 Batteries Deliverables (GW16.1-BAT-LV-G10)

Part	Description	Part	Description
	Battery x 1		Decorative cover x 1
	Lifting rod x 2		Expansion screw x 2
	M5*12 Hexagon socket head screw x 7		Wall-mounted anti-tipping bracket x 2
	Terminal resistor x 1		Grounding cable x 1

Part	Description	Part	Description
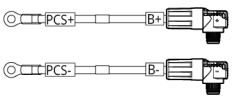	Positive power cable x 1 Negative power cable x 1		Decorative cover plug x 4
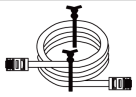	Communication cable x 1	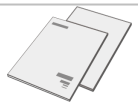	Product documentation x 1
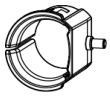	Quick-connect terminal release tool x 1		

Optional Parts

Component	Description	Component	Description
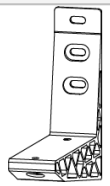	Wall mount x 2	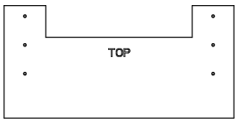	Positioning cardboard x 1
	M10 expansion bolts x 6		M10*60 bolts x 2

Component	Description	Component	Description
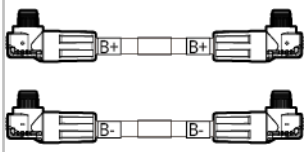	Inter-battery parallel cluster positive power cable x 1 Inter-battery parallel cluster negative power cable x 1		

Part	Description	Part	Description
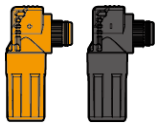	Battery Positive Quick Connector x 1 Battery Negative Quick Connector x 1		Battery OT Terminal x 2

3.2.3 Combiner Box Deliverables

3.2.3.1 BCB-11-WW-0 (Optional)

Part	Description	Part	Description
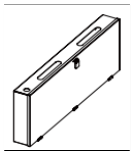	BCB-11-WW-0 Combiner Box x 1		M6 Expansion Bolt x 4
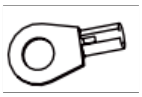	(25-8) OT terminal x 18 (70-10) OT terminal x 2	-	-

3.2.3.2 BCB-22-WW-0

Part	Description	Part	Description
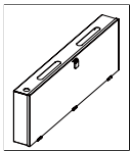	BCB-22-WW-0 Busbar Box x 1	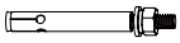	M6 Expansion Bolt x 4
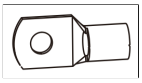	(25-8) OT terminal x 36 (70-10) OT terminal x 6	-	-

3.2.3.3 BCB-32-WW-0, BCB-33-WW-0 (optional)

Part	Description	Part	Description
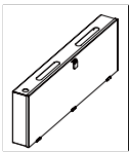	BCB-32-WW-0, BCB-33-WW-0 busbar box x 1	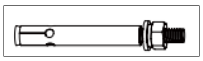	M6 expansion bolt x 4
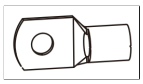	(50-8) OT terminal x 30 (70-10) OT terminal x 6	-	-

3.2.4 Smart Meter Deliverables

3.2.4.1 GMK110

Part	Description	Part	Description
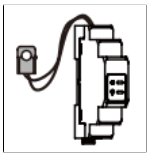	Smart meter and CT x 1	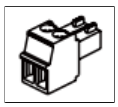	RS485 communication terminal x 1
	Voltage input side wiring terminal x 1	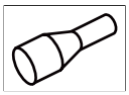	PIN terminal x 4
	screwdriver x1	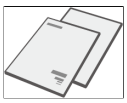	Product documentation x 1

3.2.4.2 GM330

Part	Description	Part	Description
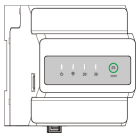	Smart Electricity Meter x1		2PIN Communication Terminal x1
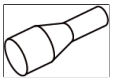	PIN terminal x 6	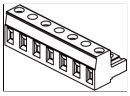	7PIN Communication Terminal x1
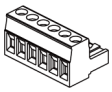	6PIN Communication Terminal x1		RS485 Communication Terminal x 1
	screwdriver x1	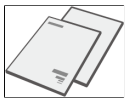	Product Documentation x 1
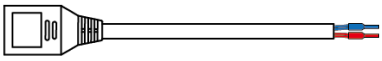	2PIN Terminal to RJ45 Terminal Adapter Cable x 1	-	-

3.3 Storage

If the device is not put into use immediately, please store it according to the following requirements. After long-term storage, the device must be inspected and confirmed by professionals before it can be used again.

1. If the inverter is stored for more than two years or not operated for more than 6 months after installation, it is recommended to be inspected and tested by professionals before being put into use.
2. To ensure the good electrical performance of the internal electronic components of the inverter, it is recommended to power it on once every 6 months during storage. If it has not been powered on for more than 6 months, it is recommended to be inspected and tested by professionals before being put into use.
3. To protect battery performance and service life, it is recommended to avoid long-term idle storage. Prolonged storage may cause deep discharge of the battery, leading to irreversible chemical loss, capacity decay, or even complete failure. It is recommended to use it in a timely manner. If the battery needs to be stored for a

long time, please maintain it according to the following requirements:

Battery Model	Initial SOC Range for Storage	Recommended Storage Temperature	Charge/Discharge Maintenance Cycle[1]	Battery Maintenance Method[2]
LX A5.0-10	30%~40%	0~35℃	-20~0℃, ≤1 month 0~35℃, ≤6 months	Please consult the dealer or after-sales service center for maintenance methods.
n*LX A5.0-10				
LX A5.0-30	30%~40%	0~35℃	-20~45℃, ≤6 months	
GW16.1-BAT-LV-G10	30%~40%	0~35℃	-20~35℃, ≤12 months 35~45℃, ≤6 months	

NOTICE

[1] Storage time is calculated from the SN date on the battery outer packaging. After exceeding the storage period, charge-discharge maintenance is required. (Battery maintenance time = SN date + charge-discharge maintenance cycle). For the method to view the SN date, refer to: SN Code Meaning.
[2] After the charge-discharge maintenance is qualified, if there is a Maintaining Label on the outer box, please update the maintenance information on the Maintaining Label. If there is no Maintaining Label, please record the maintenance time and battery SOC yourself and keep the data properly for maintaining maintenance records.

Packaging Requirements:

Ensure that the outer packaging box is not removed and the desiccant inside the box is not lost.

Environmental Requirements:

1. Ensure that the device is stored in a cool place, avoiding direct sunlight.
2. Ensure that the storage environment is clean, with appropriate temperature and humidity ranges, and no condensation. If there is condensation on the device

ports, do not install the device.
3. Ensure that the device is stored away from flammable, explosive, corrosive, and other hazardous materials.

Stacking Requirements:

1. Ensure that the stacking height and direction of the inverter are arranged according to the instructions on the packaging box label.
2. Ensure that there is no risk of tipping after the inverter is stacked.

4 Installation

⚠DANGER

When installing the device and making electrical connections, please use the delivery items shipped with the box. Otherwise, any device damage caused will not be covered under warranty.

4.1 System Installation and Commissioning Procedure

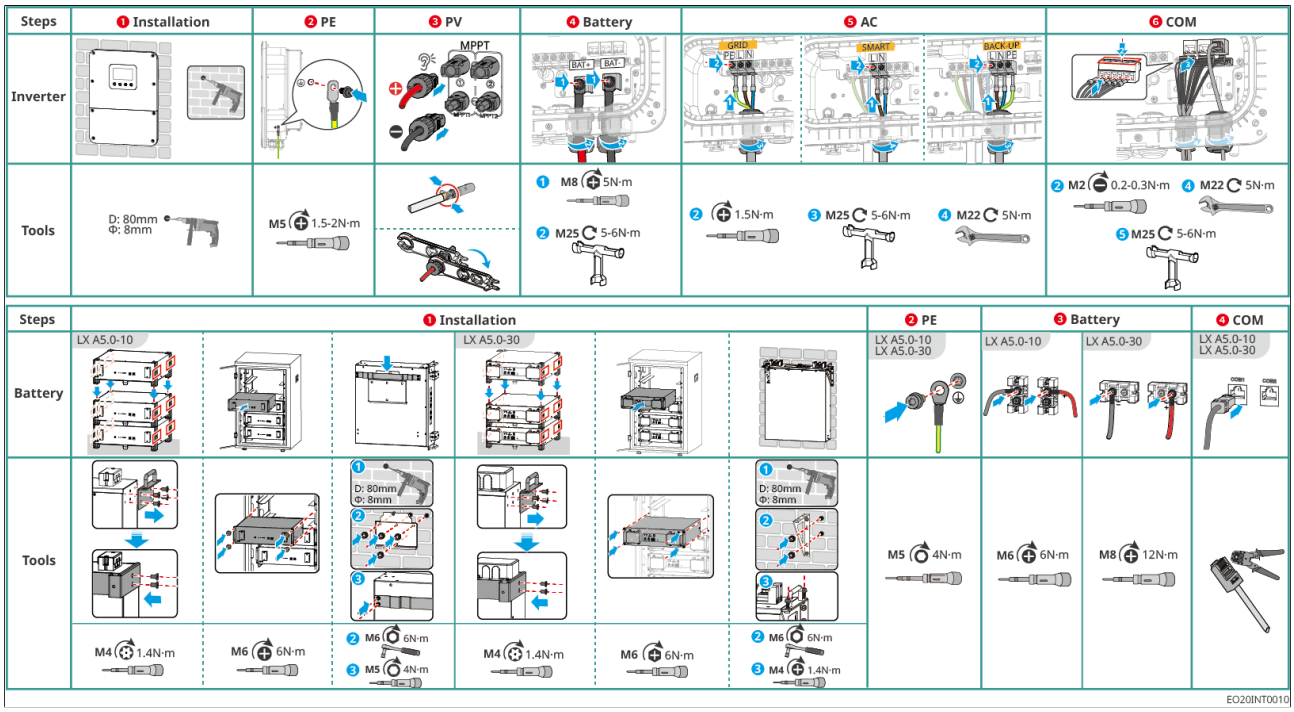

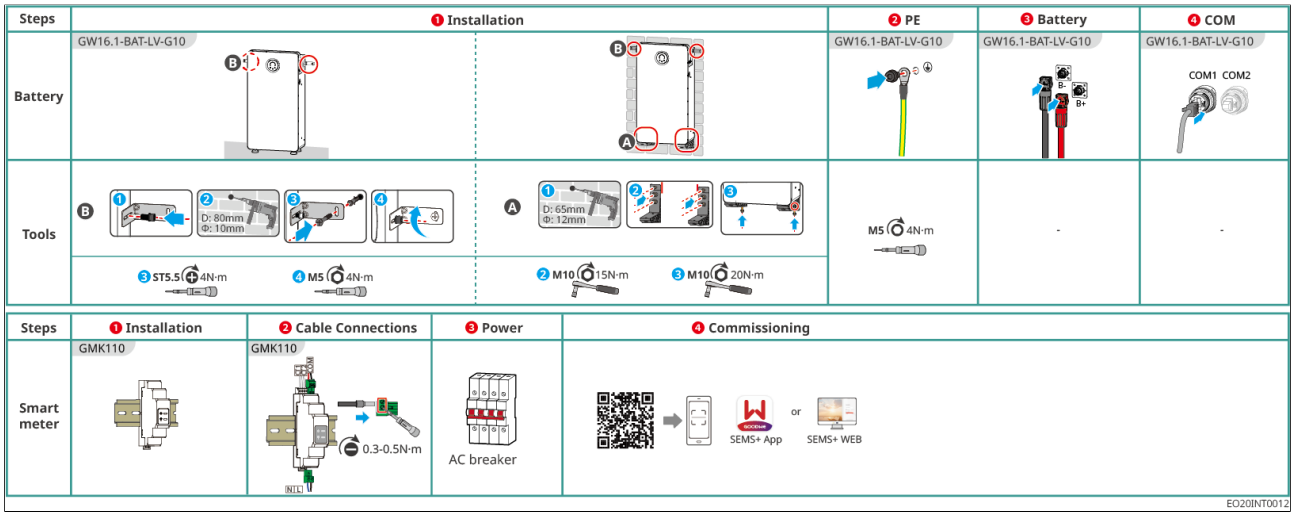

4.2 Installation Requirements

4.2.1 Installation Environment Requirements

1. Do not install the equipment in flammable, explosive, corrosive, or similar environments.
2. The ambient temperature and humidity at the installation site must be within the suitable range.
3. The installation location must be out of reach of children and avoid easily accessible positions.
4. The enclosure temperature of the Inverter may exceed 60°C during operation. Do not touch the enclosure before it cools down to prevent burns.
5. Avoid installing the equipment in environments exposed to direct sunlight, rain, snow accumulation, etc. It is recommended to install it in a sheltered location. If necessary, a sunshade canopy can be built.
6. Adverse environmental conditions such as direct sunlight and high temperatures may cause the Inverter output power to derate.
7. The installation space must meet the equipment's ventilation, heat dissipation, and operational space requirements.
8. The installation environment must satisfy the equipment's ingress protection (IP) rating. The Inverter, battery, and smart communication stick are suitable for both indoor and outdoor installation; the meter is suitable for indoor installation only.
9. The equipment installation height should facilitate operation and maintenance, ensuring the equipment indicator lights, all labels are easily visible, and the wiring terminals are easy to access.

10. The installation altitude of the equipment should be below the maximum operating altitude.
11. For outdoor installation in salt damage areas, consult the equipment manufacturer before installation. Salt damage areas mainly refer to regions within 500 meters of the coastline. The affected area is related to factors such as sea wind, precipitation, and terrain.
12. Keep away from strong magnetic field environments to avoid electromagnetic interference. If there are radio stations or wireless communication equipment operating below 30MHz near the installation site, install the equipment according to the following requirements:
    - Inverter: Add ferrite cores with multiple windings to the Inverter's DC input lines or AC output lines, or add a low-pass EMI filter; or ensure the distance between the Inverter and the wireless electromagnetic interference source exceeds 30m.
    - Other equipment: Ensure the distance between the equipment and the wireless electromagnetic interference source exceeds 30m.
13. The length of the DC cables and communication cables between the battery and the Inverter must be less than 3m. Ensure the installation distance between the Inverter and the battery meets the cable length requirement.

NOTICE

If installed in an environment below 0°C, the battery will be unable to recharge and restore energy after being depleted, resulting in battery under-voltage protection.

- LX A5.0-30, GW16.1-BAT-LV-G10: Charging temperature range: 0 < T ≤ 55°C; Discharging temperature range: -20 < T ≤ 55°C
- LX A5.0-10: Charging temperature range: 0 < T ≤ 50°C; Discharging temperature range: -10 < T ≤ 50°C

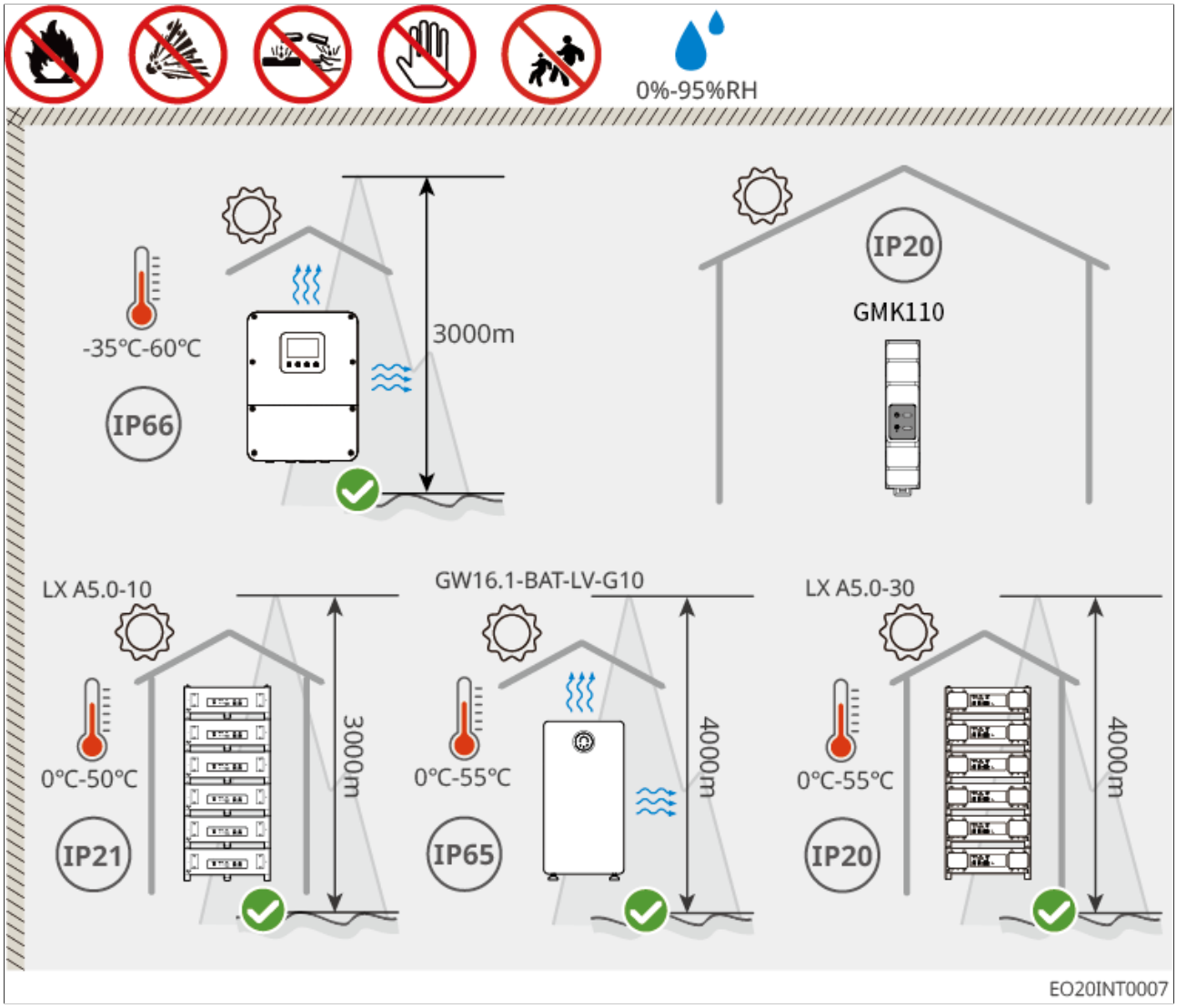

4.2.2 Installation Space Requirements

When installing devices in the system, sufficient space should be reserved around the devices to ensure adequate installation and heat dissipation space.

- Installing CT requires the use of shielded network cable of CAT5E or above, with a cable distance not exceeding 30 meters.
- The RS485 twisted-pair shielded wire for communication between the inverter and the meter should not exceed 100 meters in length.

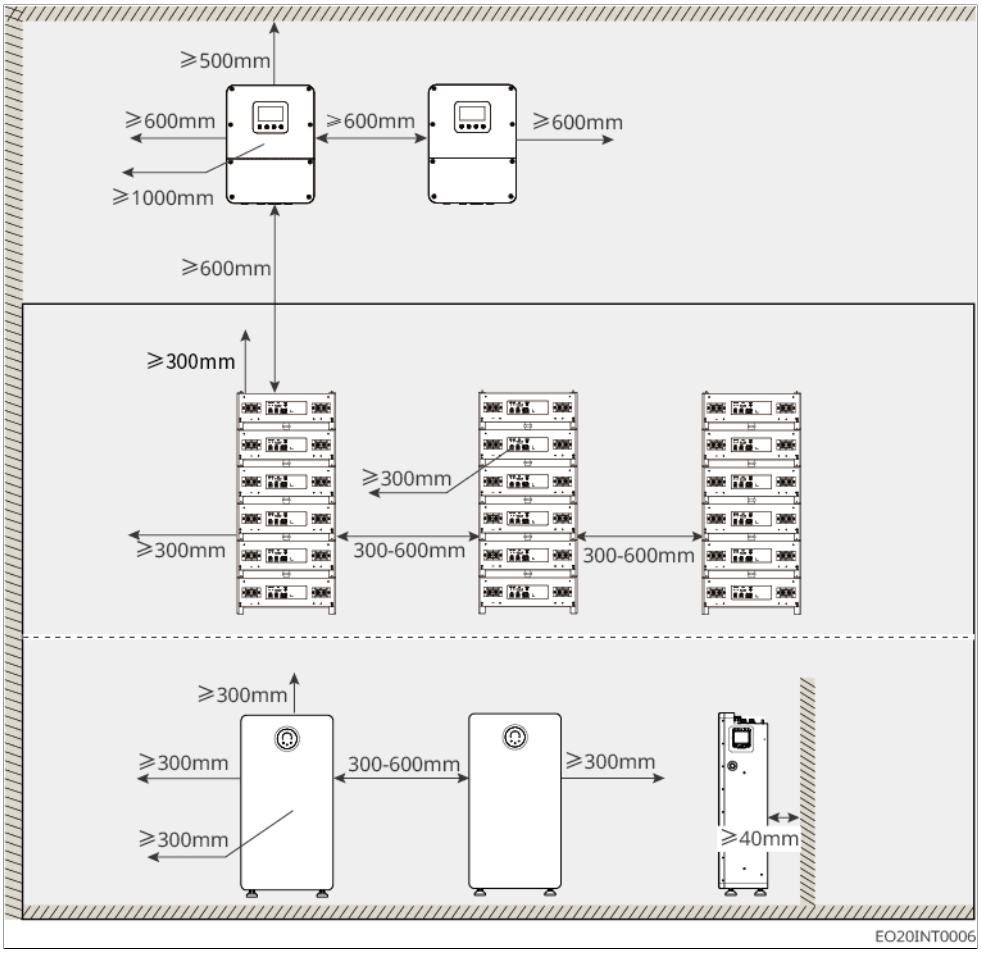

Figure3 Installation Space Requirements

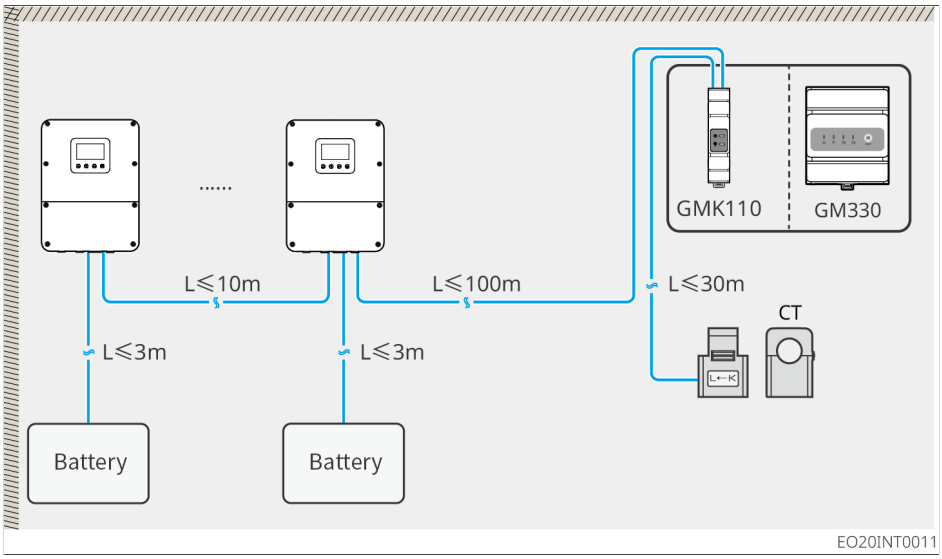

Figure4 Cable Length Requirements

4.2.3 Tool Requirements

NOTICE
During installation, it is recommended to use the following installation tools. If necessary, other auxiliary tools can be used on-site.

Installation Tools

Tool Type	Description	Tool Type	Description
	diagonal plier		RJ45 Connector Crimping Tool
	wire stripper		Level bar
	open-end wrench	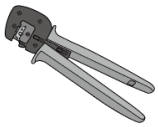	PV Terminal Crimping Tool A-2546B
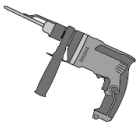	hammer drill (Bit Φ8mm)	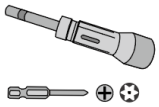	torque wrench M2, M5, M6, M8
	rubber hammer		socket wrench
	Marker Pen	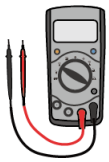	multimeter Range ≤600V
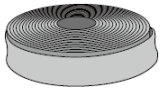	Heat Shrink Tubing		Heat Gun

Tool Type	Description	Tool Type	Description
	cable tie		Vacuum Cleaner
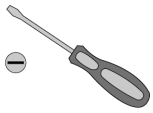	Flathead Screwdriver	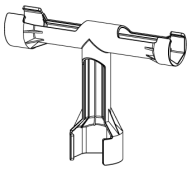	Cable Gland Unlocking Tool Note: Please contact your distributor or GoodWe to purchase if needed.
	Inverter Battery Cable Crimping Tool HS-95WF	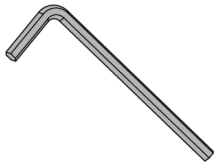	Hex Key M16, M8

personal protective equipment

Tool Type	Description	Tool Type	Description
	Insulating gloves, protective gloves	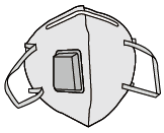	Dust mask
	goggle		Safety shoes

4.3 Equipment Handling

⚠CAUTION

1. During operations such as transportation, handling, and installation, the laws, regulations, and relevant standard requirements of the country/region must be met.
2. Before installation, the equipment needs to be moved to the installation site. To avoid personal injury or equipment damage during the moving process, please note the following:
   a. Based on the equipment weight, assign a sufficient number of personnel to avoid the equipment weight exceeding the human capacity for manual handling, which could cause injury from dropping.
   b. Please wear safety gloves to avoid injury.
   c. Ensure the equipment remains balanced during movement to prevent falling.
   d. The battery system can be removed from the packaging and transported to the installation site using a crane or hoisting method.
      - Crane requirement GW16.1-BAT-LV-G10: Load capacity ≥180kg
      - When using the hoisting method to move the equipment, please use flexible slings or straps. The requirements for the lifting lugs and sling of GW16.1-BAT-LV-G10 are: Lifting lugs: 4 M10 lugs, each with a load capacity ≥260 kg; Sling: 1 piece, rope length ≥2.5m, sling load capacity ≥600kg

4.4 Installing the Inverter

⚠CAUTION

- When drilling holes, ensure that the drilling position avoids water pipes, cables, etc., inside the wall to prevent danger.
- When drilling holes, please wear safety goggles and a dust mask to avoid inhaling dust into the respiratory tract or getting it into the eyes.
- Ensure that the inverter is installed securely to prevent it from falling and injuring personnel.

1. Place the back mounting plate horizontally on the wall, and use a marker pen to mark the drilling positions.
2. Use an impact drill to drill the holes.
3. Fix the inverter back mounting plate bracket to the wall using expansion screws.

4. Hang the inverter on the back plate. After hanging, install the anti-theft lock.

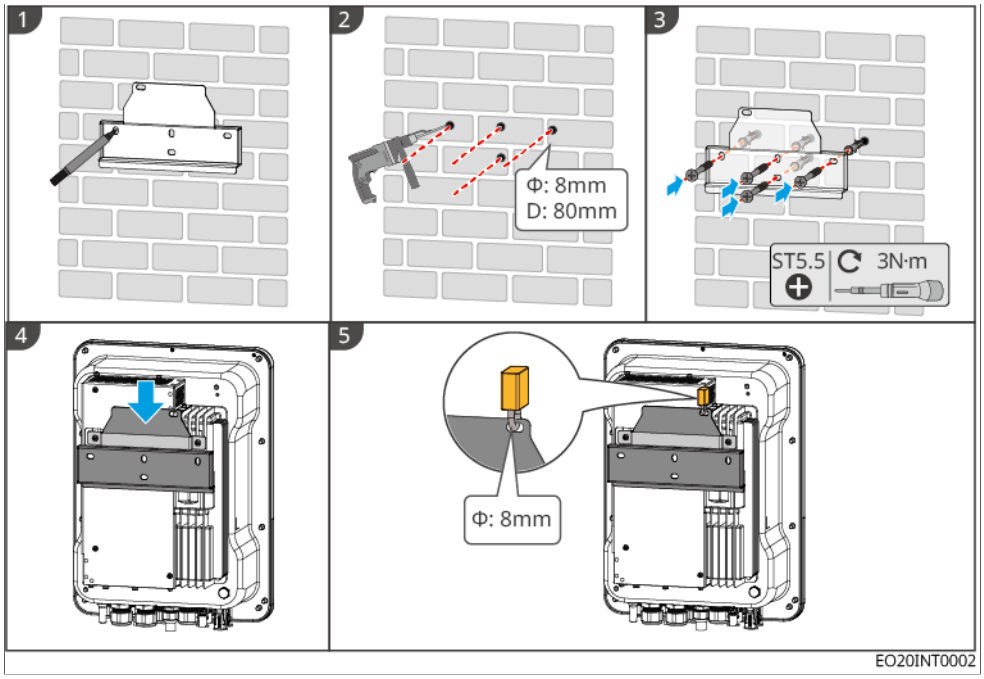

Figure5 Installing the Inverter

4.5 Installing the Battery System

⚠WARNING

- When installing the battery system, ensure it is level and securely mounted. When using an anti-tip bracket, the bracket must be vertical and tightly against both the wall and the battery system surface.
- When using an impact drill to create holes, use cardboard or other shielding to cover the battery system to prevent debris from entering the device and causing damage.
- After marking the drilling positions with a marker pen, move the battery system away to avoid damaging the device due to the impact drill being too close to it during the drilling operation.

4.5.1 LX A5.0-30

LX A5.0-30: Floor Stacking

NOTICE
A maximum of 6 batteries can be stacked on the floor.

1. Place the battery vertically and remove the battery handle.
2. Install the bracket onto the battery and secure it with screws.
3. Lay the battery flat and stack multiple batteries for installation. Ensure the locating pins are inserted into the locating holes.

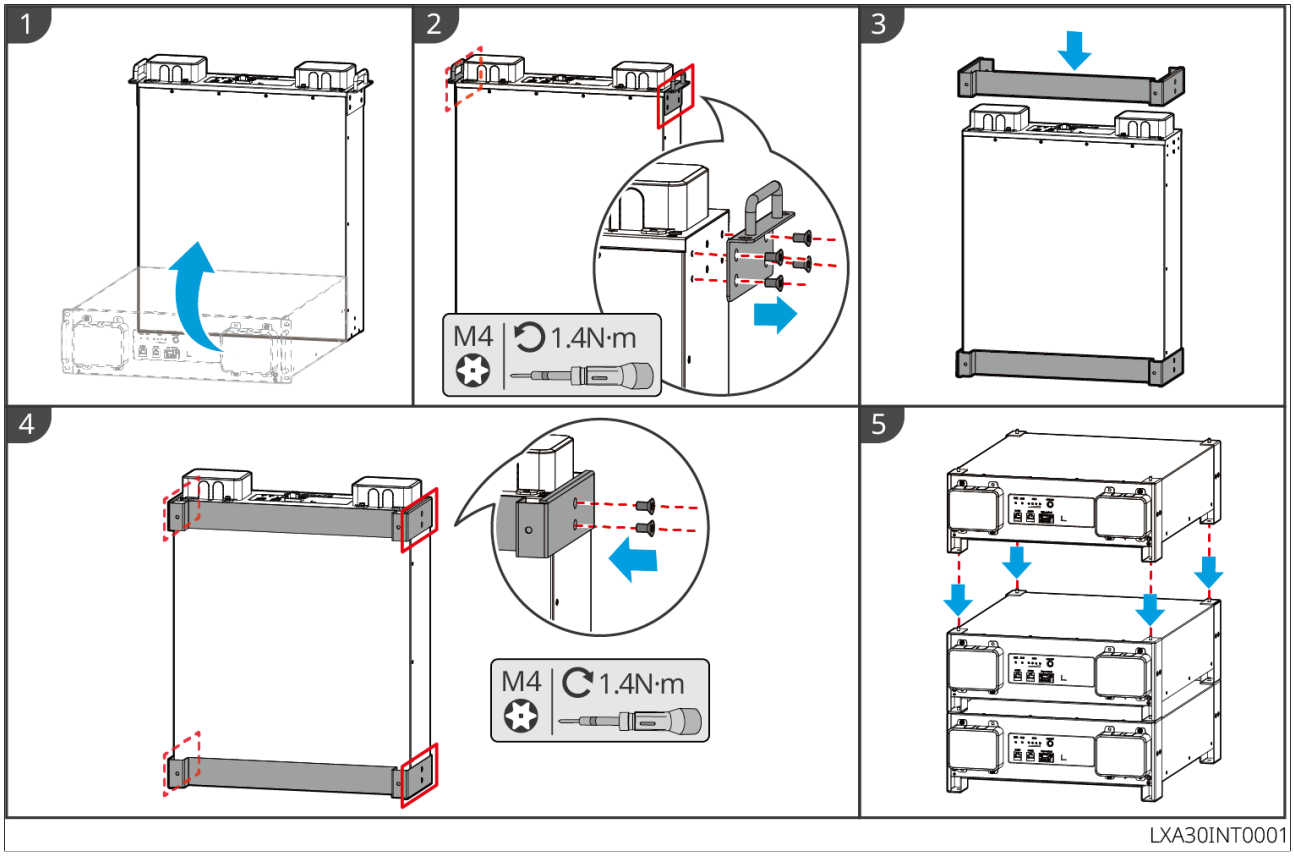

LX A5.0-30: Cabinet Installation

NOTICE

- It is recommended to install in a 19-inch standard cabinet, with dimensions (length*width) of 600*800mm or larger. Height should be selected based on the battery thickness (133mm) or greater.
- For cabinet installation, electrical labels and warning labels (these labels are shipped separately as accessories) must be affixed on any battery front panel.

1. Place the battery onto the rails inside the cabinet, and secure the battery to the cabinet from the handle position using screws.

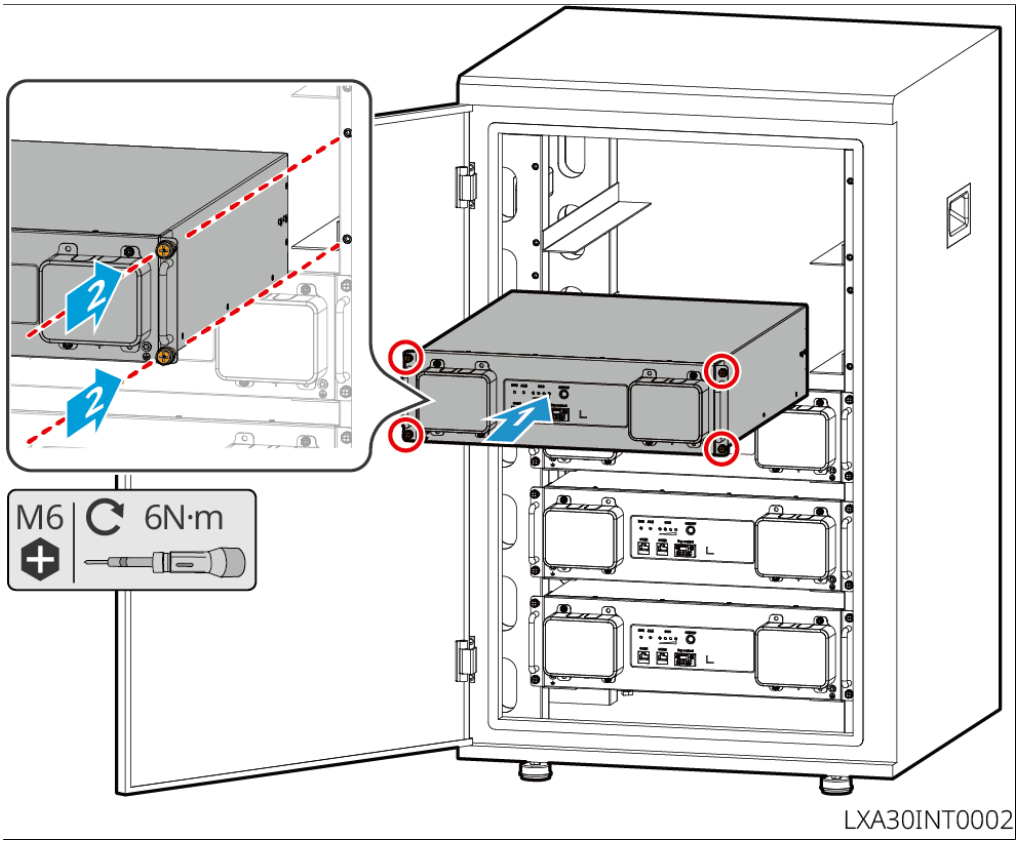

LX A5.0-30: Wall Mount Installation

1. Determine the drilling positions according to the marking template and mark them with a marker pen.
2. Drill holes using an impact drill.
3. Install the battery wall bracket.
4. Mount the battery onto the bracket and secure the connection between the battery and the bracket with screws.

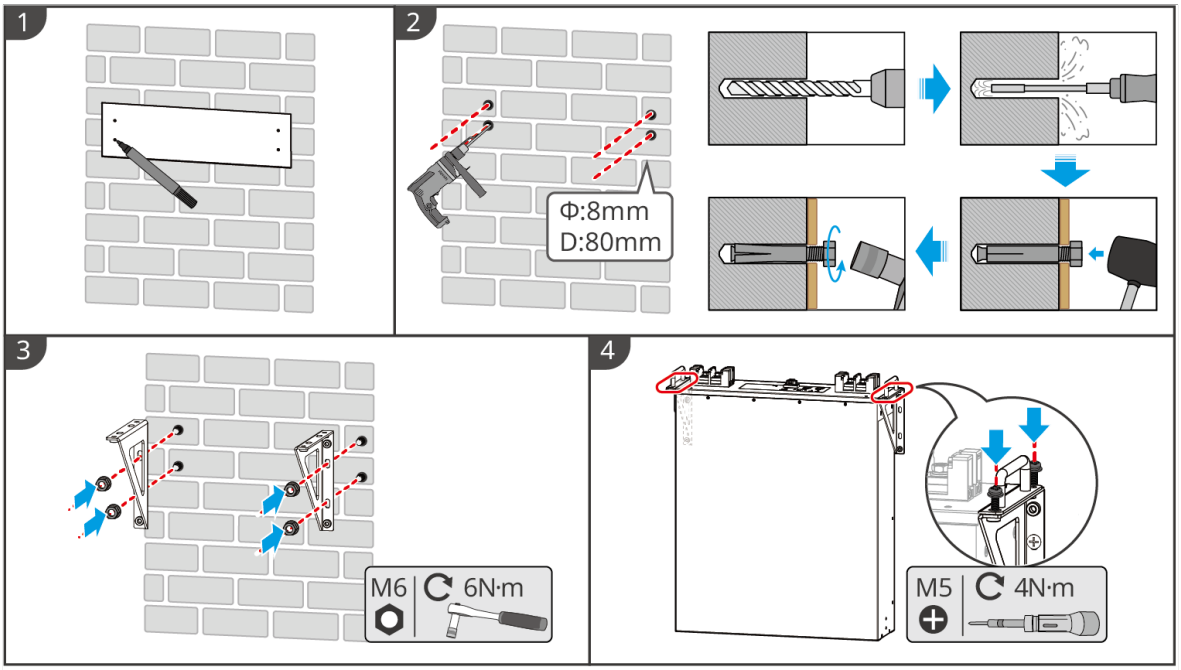

4.5.2 LX A5.0-10

LX A5.0-10: Floor Stacking

NOTICE
A floor stack can hold a maximum of 6 batteries.

1. Place the battery vertically.
2. Place the bracket onto the battery and remove the handle from the battery.
3. Place another bracket onto the battery.
4. Secure the brackets to the battery with screws, and lay the battery flat.
5. Stack and install multiple batteries.
   - Align the positioning pins on the lower battery bracket with the positioning holes on the upper battery bracket, and insert the pins into the holes.

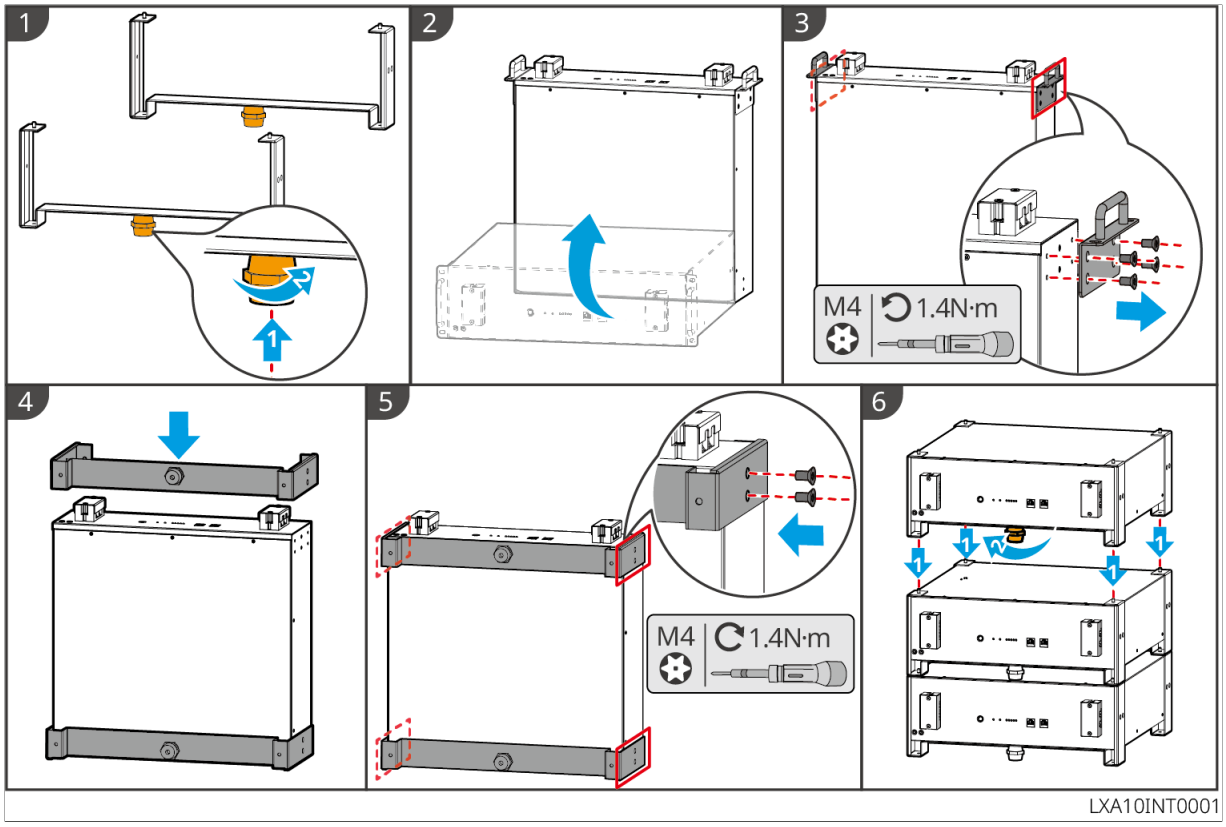

LX A5.0-10: Cabinet Installation

NOTICE
• A standard 19-inch rack is recommended, with physical dimensions of 600*800mm or larger for length and width, and height can be selected based on the number of battery parallel connections. • For cabinet installation, electrical labels and warning labels must be affixed to the front panel of any battery (these labels are shipped as additional accessories).

1. Attach the electrical label and warning label to the front panel of any battery.
2. Place the battery onto the cabinet rails and secure the battery to the cabinet with screws through the handle.

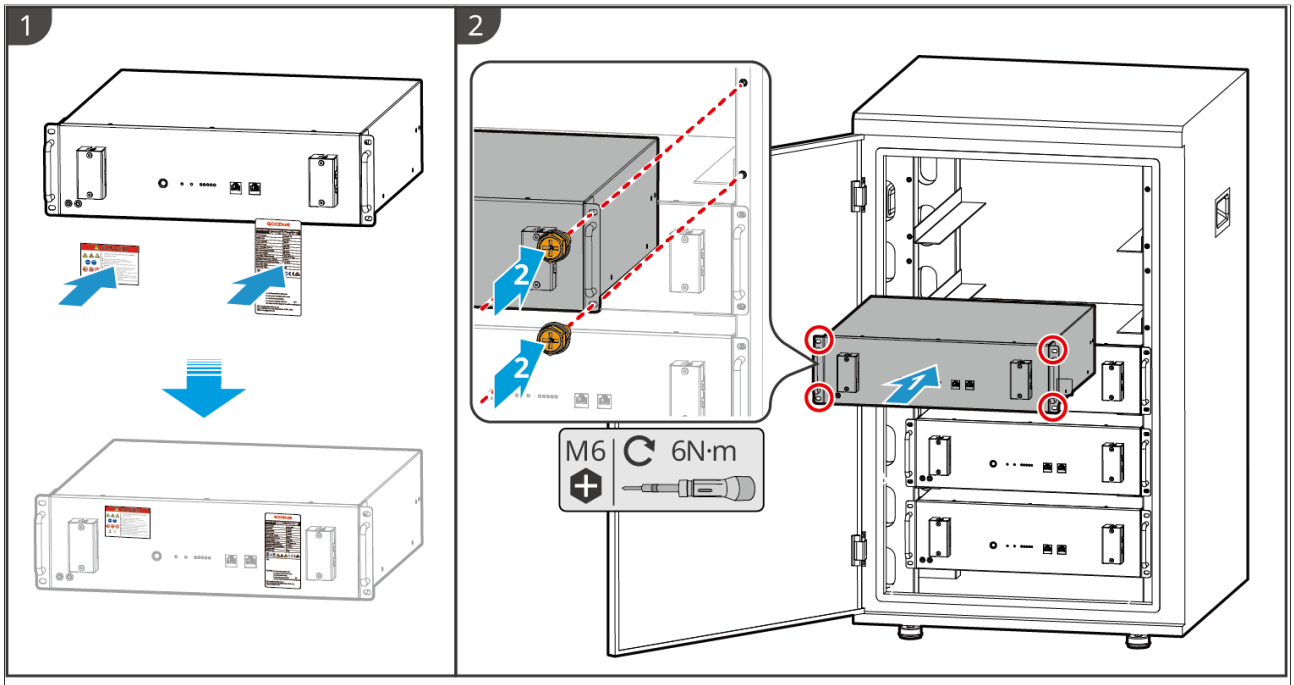

LXA10INT0002

LX A5.0-10: Wall Mount Installation

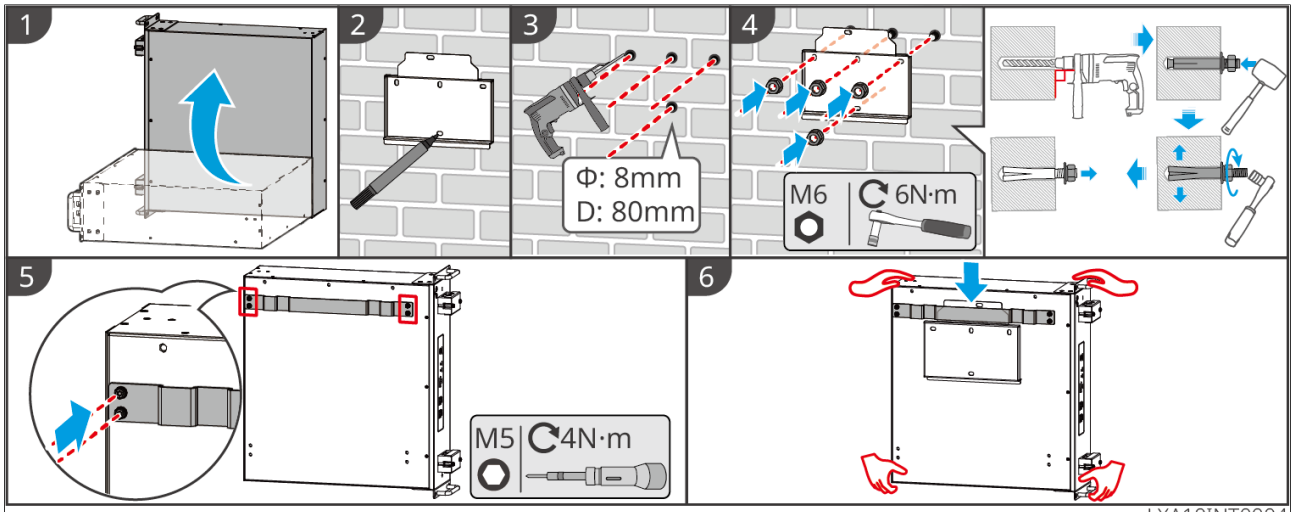

LXA10INT0004

4.5.3 GW16.1-BAT-LV-G10

NOTICE
• Wall mounting requires two-person installation.

Floor Installation

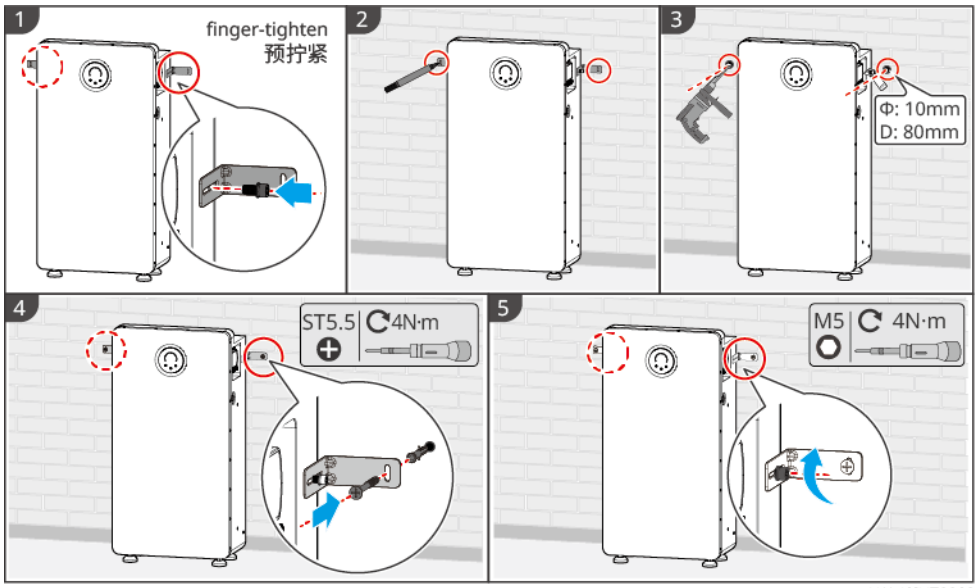

LXA40INT0002

Wall-mounted Installation

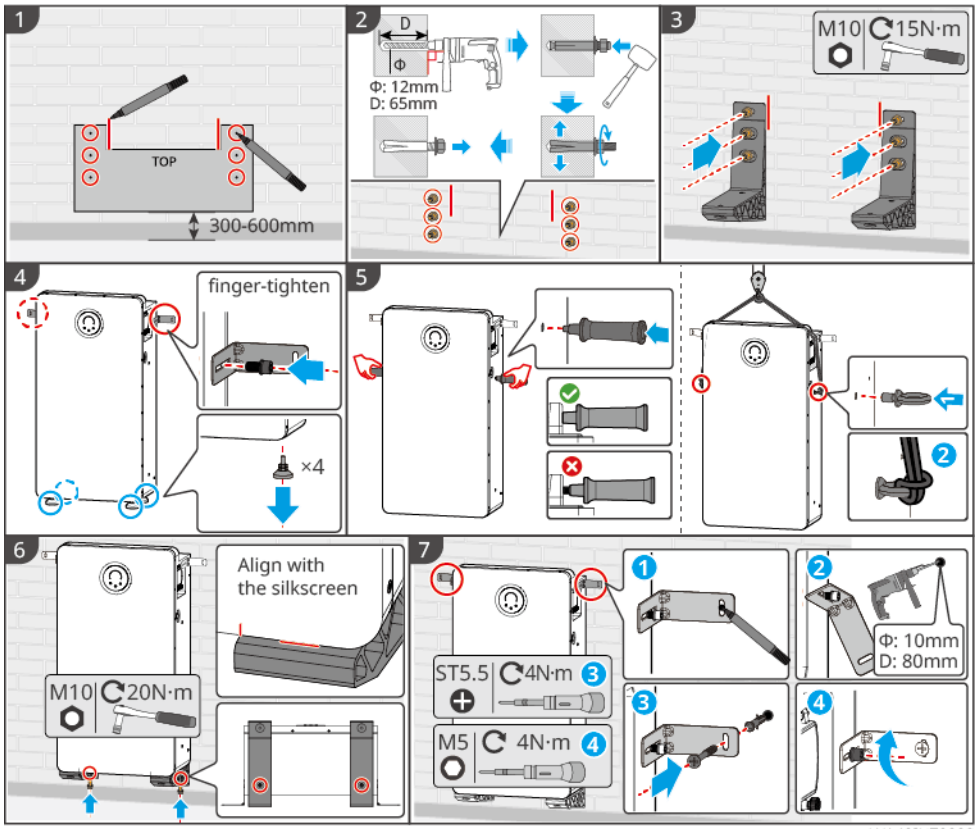

LXA40INT0003

4.6 Installing the Smart Meter

⚠WARNING

In areas with lightning hazard, if the meter cable length exceeds 10m and the cable is not routed using a grounded metal conduit, it is recommended to install an external lightning protection device.

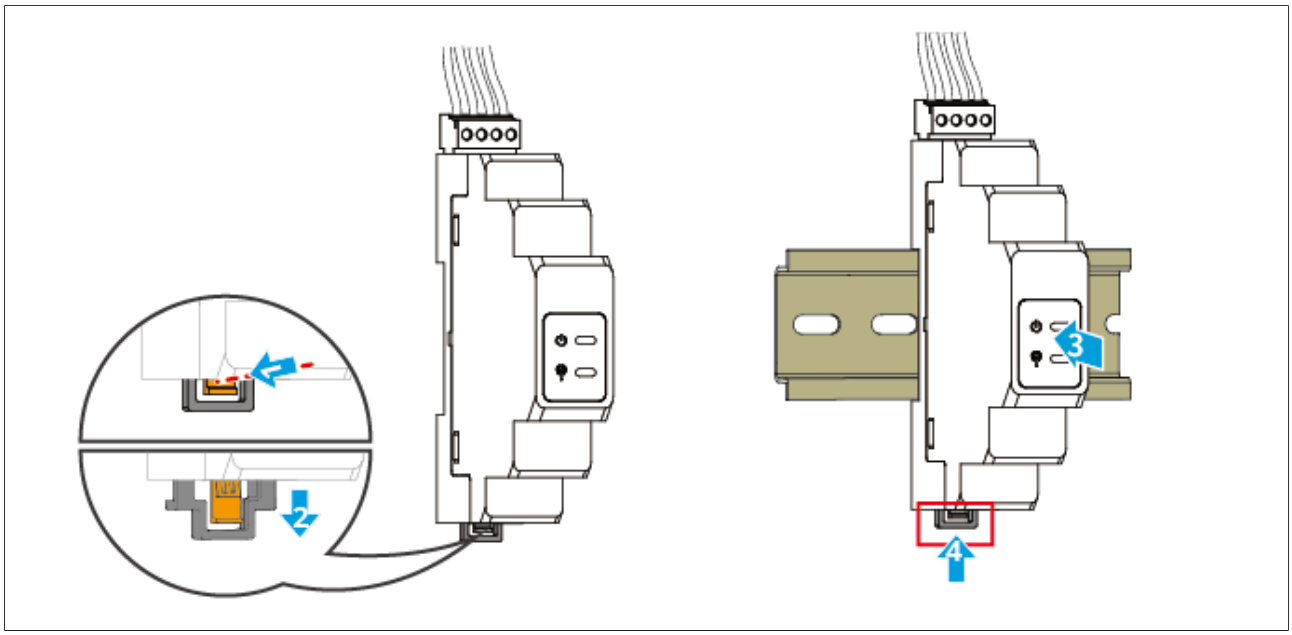

Figure6 Installing the GMK110

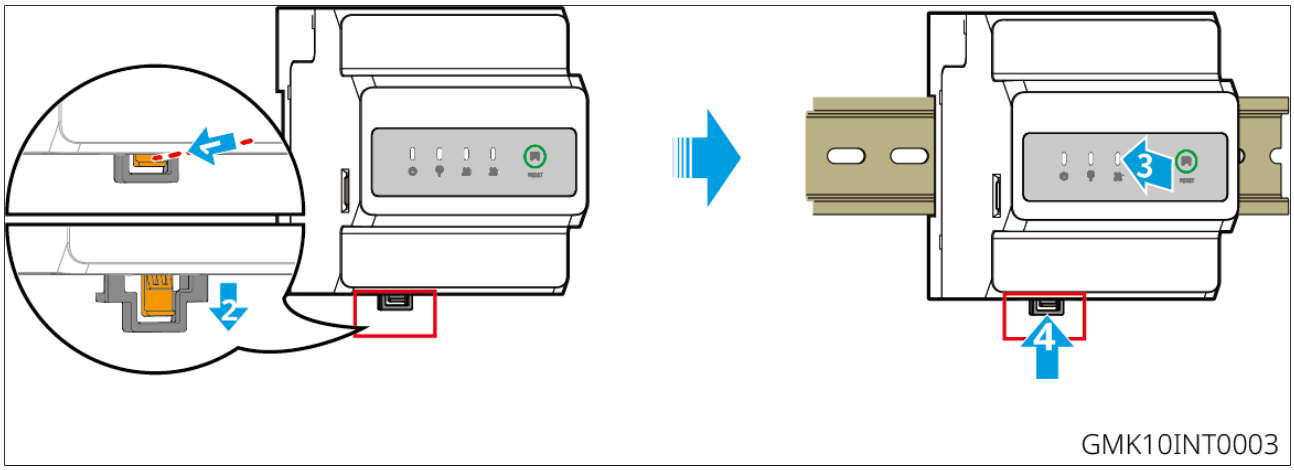

Figure7 Installing the GM330

5 System Wirings

⚠DANGER

- The installation, routing, and connection of cables must comply with local laws, regulations, and standard requirements.
- All operations during electrical connection, as well as the specifications of cables and components used, must meet local legal and regulatory requirements.
- Before performing electrical connections, disconnect the DC switch and AC output switch of the equipment to ensure it is powered off. Live working is strictly prohibited, otherwise, hazards such as electric shock may occur.
- Cables of the same type should be bundled together and arranged separately from different types of cables. Intertwining or crossing arrangements are prohibited.
- If a cable is subjected to excessive tension, poor connections may result. When connecting, leave a certain length of cable slack before connecting it to the inverter terminal ports.
- When crimping terminals, ensure the conductor part of the cable makes full contact with the terminal. Do not crimp the cable insulation together with the terminal, as this may cause equipment failure, or after operation, lead to issues such as heating due to unreliable connections, potentially damaging the inverter terminal block.

NOTICE

- When performing electrical connections, please wear personal protective equipment such as safety shoes, protective gloves, insulating gloves, etc., as required.
- Only professionals are allowed to perform electrical connection-related operations.
- The cable colors in the diagrams in this document are for reference only. Specific cable specifications must comply with local regulatory requirements.
- For parallel systems, please NOTICE to comply with the safety NOTICE items in the user manuals corresponding to the related products in the system.

5.1 System Wiring Electrical Block Diagram

NOTICE

- Depending on regional regulatory requirements, the wiring methods for the N wire and PE wire at the inverter's ON-GRID and BACK-UP ports differ. Please follow the specific local regulations.
- The inverter's ON-GRID AC port has a built-in relay. When the inverter is in off-grid mode, the built-in ON-GRID relay is open; when the inverter is in grid-tied operation mode, the built-in ON-GRID relay is closed.
- When the inverter is powered on, the BACK-UP AC port is live. If maintenance is required on the BACK-UP Loads, please power down the inverter first, otherwise electric shock may occur.

The N and PE lines are wired separately in the distribution box.

NOTICE

- Please ensure that the protective ground wire of BACK-UP is connected correctly and securely, otherwise, the BACK-UP function may malfunction when a grid fault occurs.
- For regions other than Australia, New Zealand, etc., the following wiring methods apply:

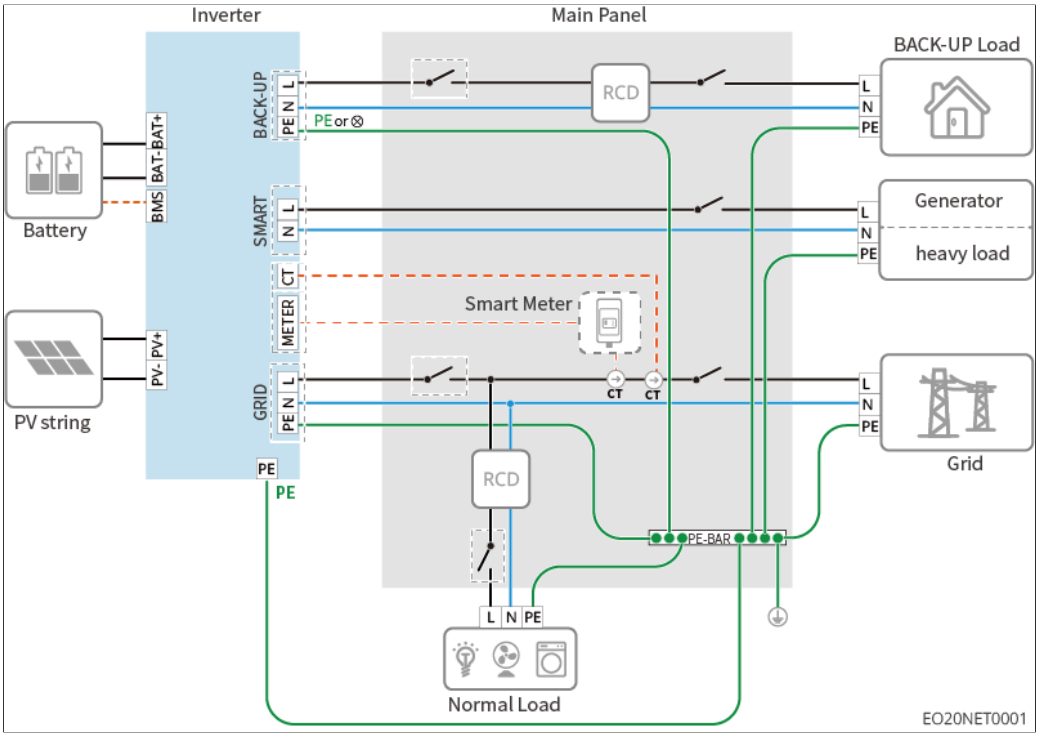

Figure8 Except for regions like Australia, New Zealand, etc.

5.2 Detailed System Wiring Diagram

- When photovoltaic power generation and battery discharge are insufficient to cover all load electricity consumption, the system will purchase electricity from the grid to make up the difference. To monitor grid purchase electricity and grid-side load electricity data in real-time, smart meters or CTs can be installed.
- After connecting the smart meter or CT, please set the "Meter Binding" function via the App based on the actual connection.
- For parallel operation and single-phase to three-phase systems, it is necessary to set the parallel unit networking mode via the App or LCD screen.

5.2.1 Detailed System Wiring Diagram for Single Inverter

Whole House Backup Scenario

Whole house backup refers to when the grid is interrupted, the energy storage system can seamlessly take over all loads, achieving continuous and stable power supply for the entire house, ensuring all electrical equipment is unaffected by grid fluctuations.

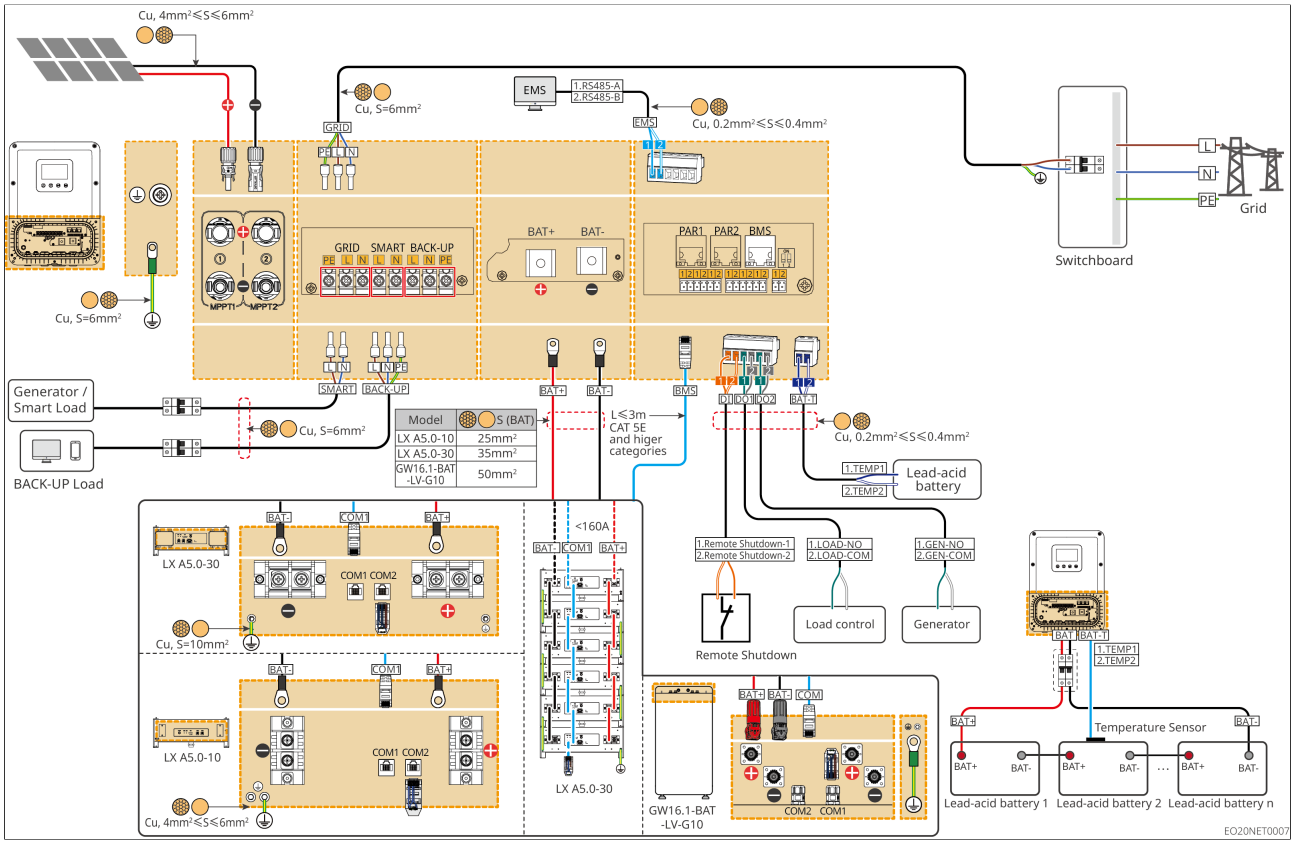

Figure9 Whole House Backup Scenario

Partial Backup Scenario

Partial backup refers to when grid power is out, the energy storage system only ensures the operation of loads connected to the backup side (BACK-UP) and smart side (SMART) ports, while loads connected to the grid side (GRID) will not work. To achieve precise load management and scheduling, the system requires external CT or smart meters to monitor the power consumption of grid-side loads in real time.

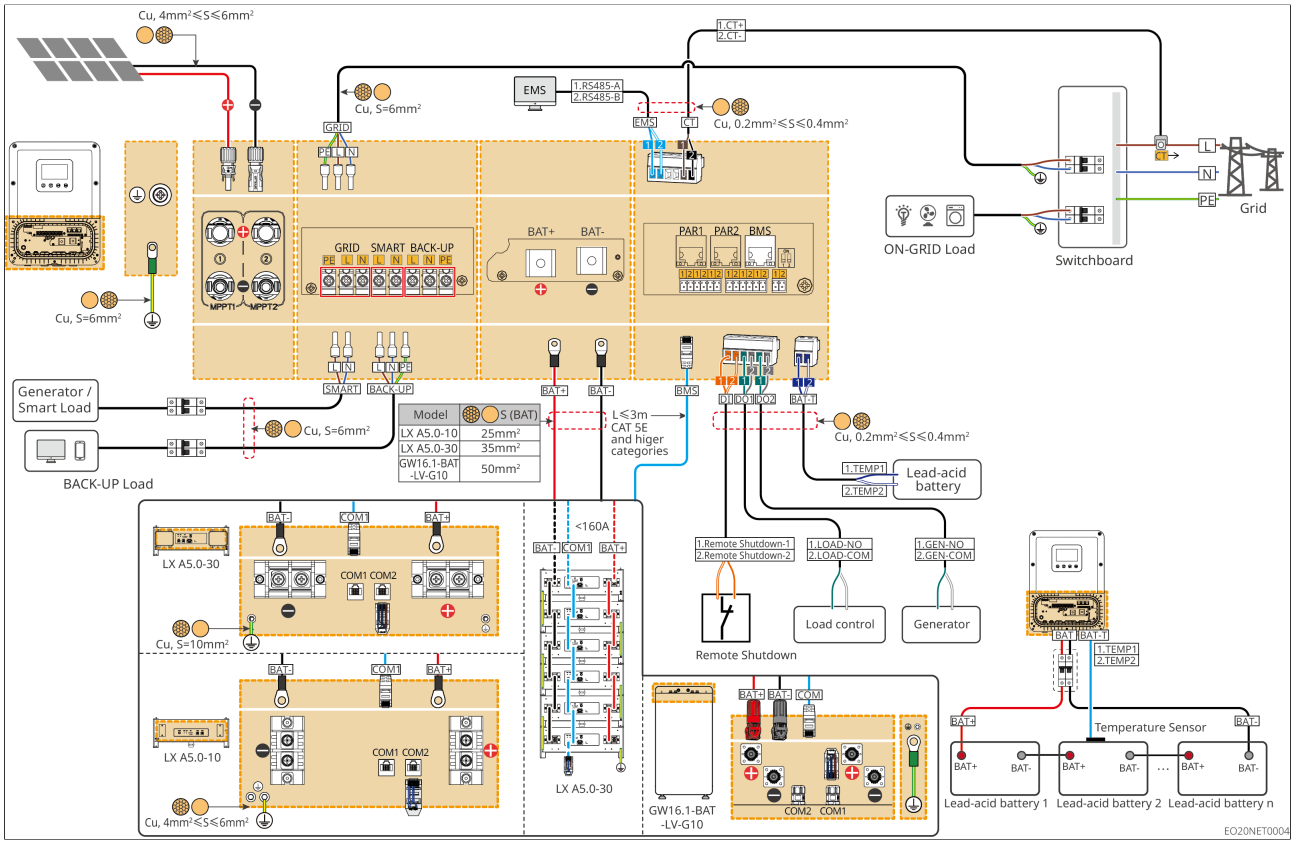

Figure10 Partial Backup Scenario with CT

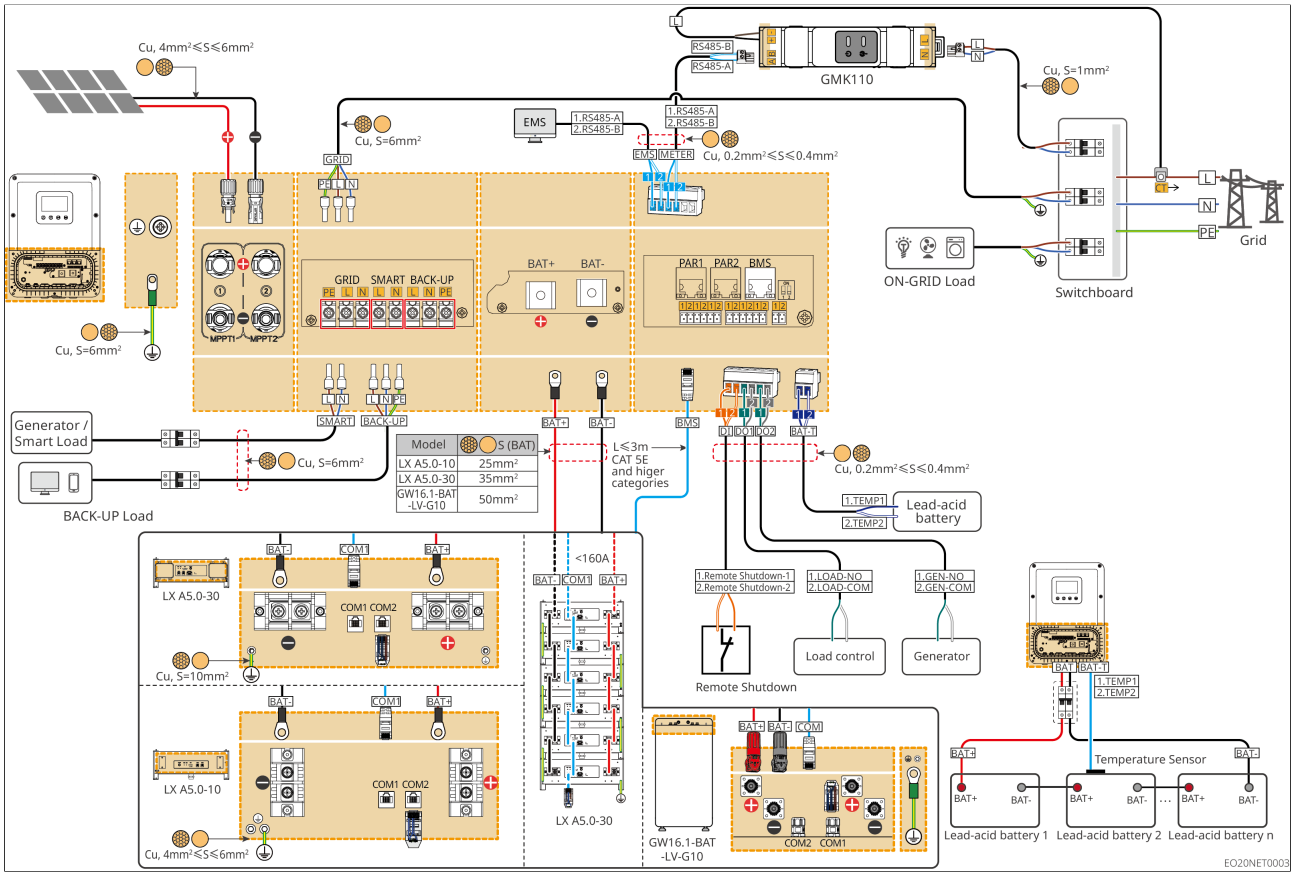

Figure11 Partial Backup Scenario with GMK110

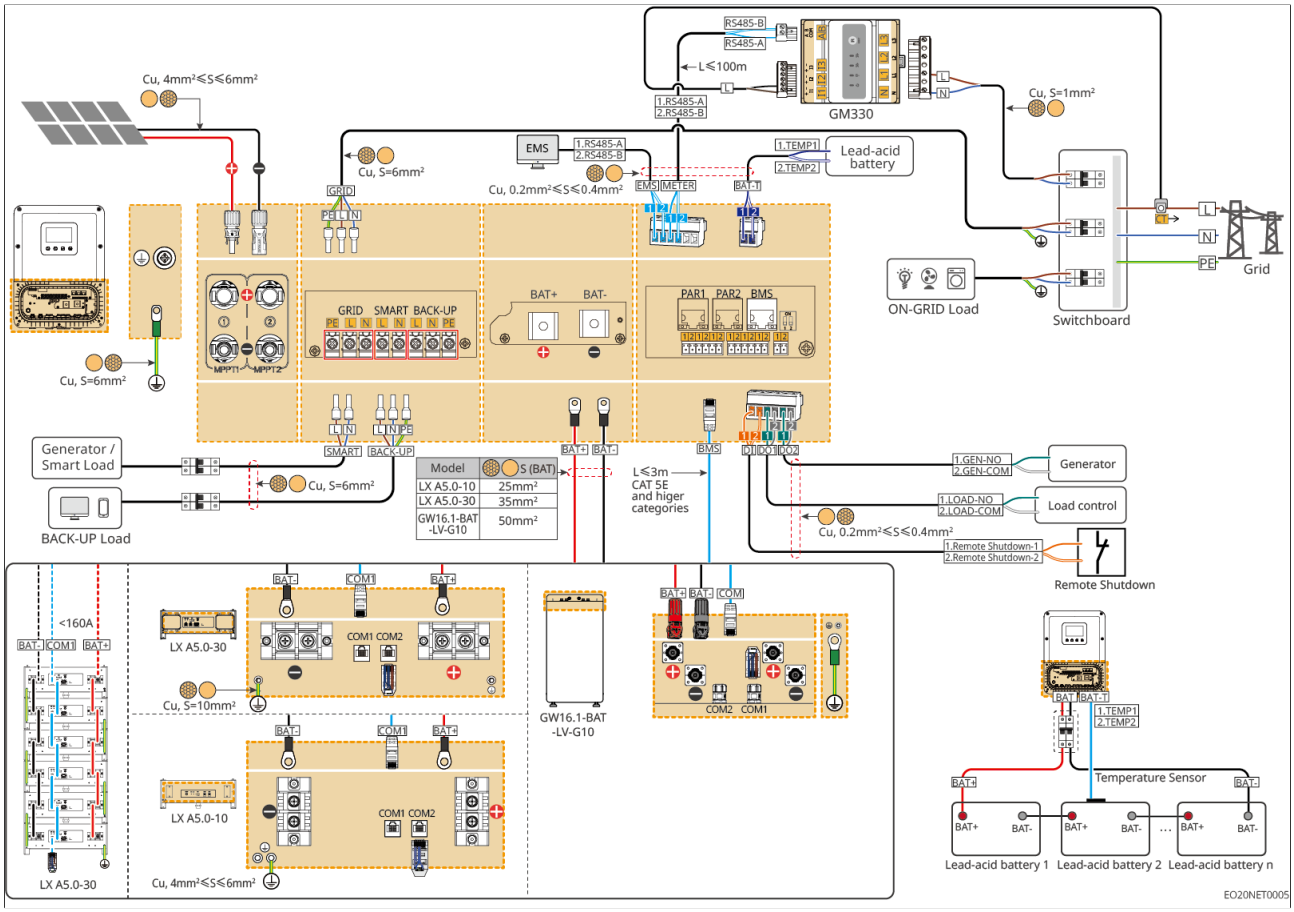

Figure12 Partial Backup Scenario with GM330

5.2.2 Detailed System Wiring Diagram for Parallel System

NOTICE

- In a parallel system, a meter or CT must be connected to enable power monitoring. The inverter connected to the meter or CT is the master inverter, while the others are slave inverters.
- The parallel system supports connection to generators and large loads.
- In a parallel scenario, when the inverters are not in busbar mode, each inverter can be connected to batteries of different models. For specific wiring methods, refer to Connecting the Battery Cable.
- When using CT and the GMK110 meter, a maximum of 3 inverters can be networked in parallel. When using the GM330 meter, a maximum of 10 inverters can be networked in parallel.
- The following diagrams focus on wiring related to parallel operation. For wiring requirements of other ports, please refer to the single-unit system.

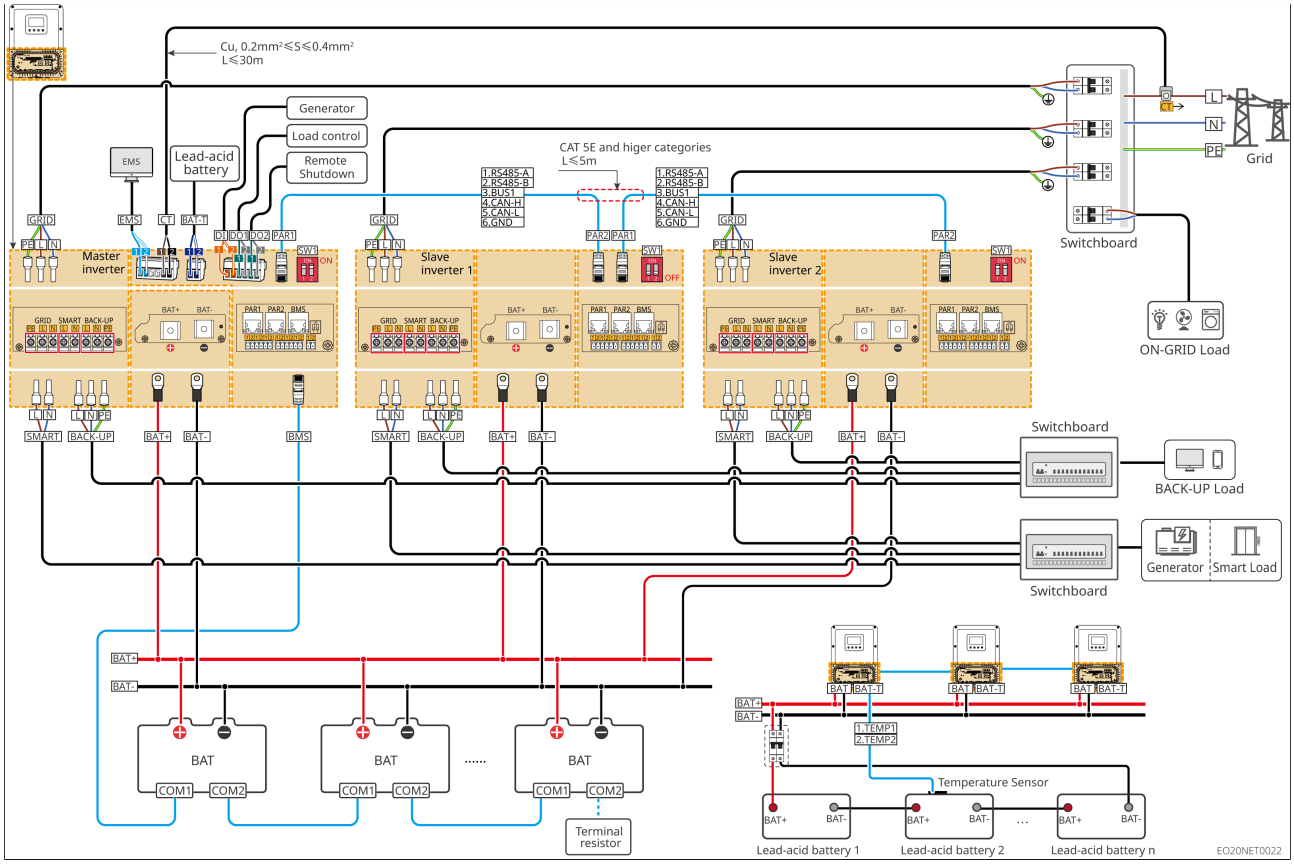

Figure13 With CT Scenario

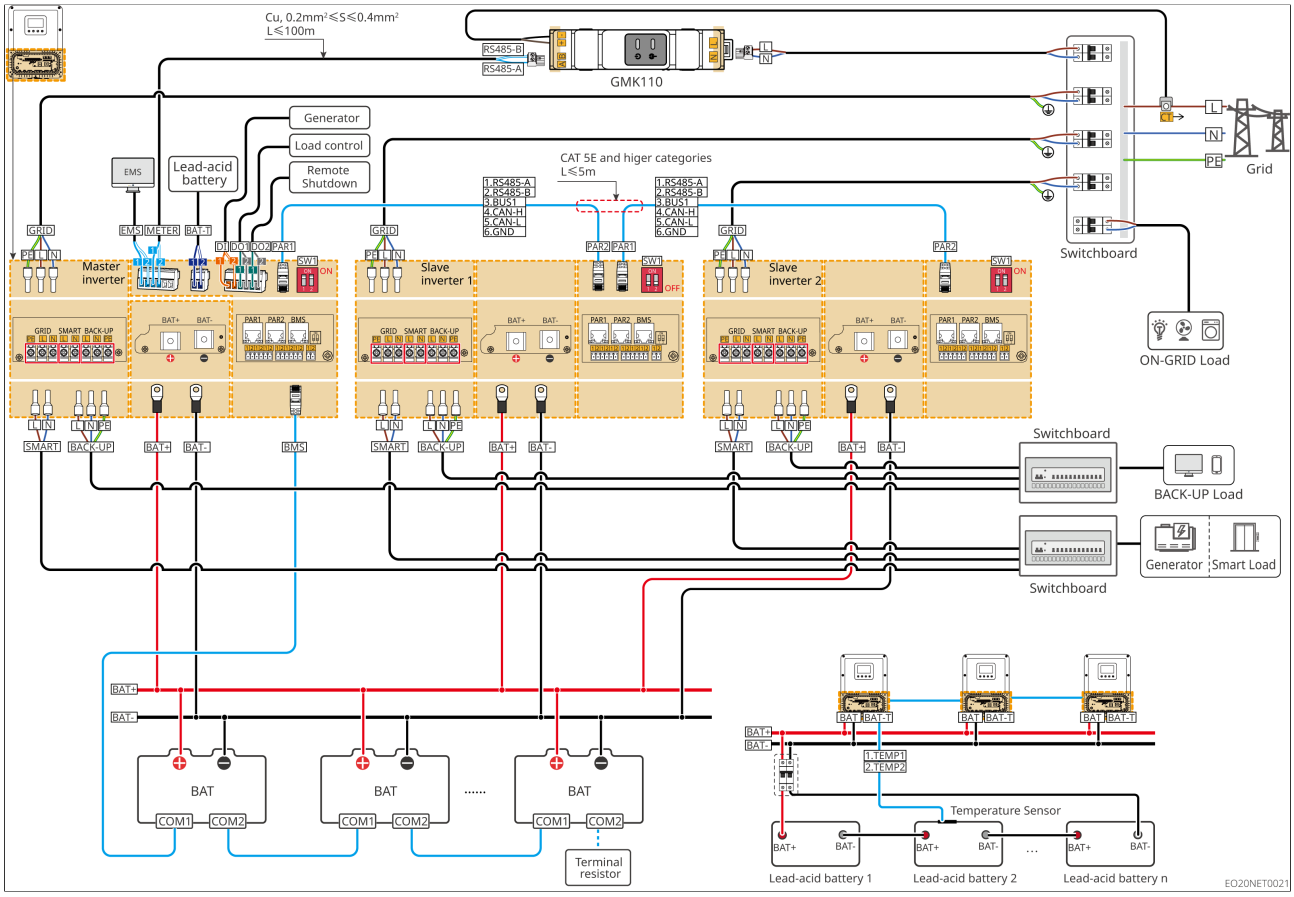

Figure14 With GMK110 Scenario

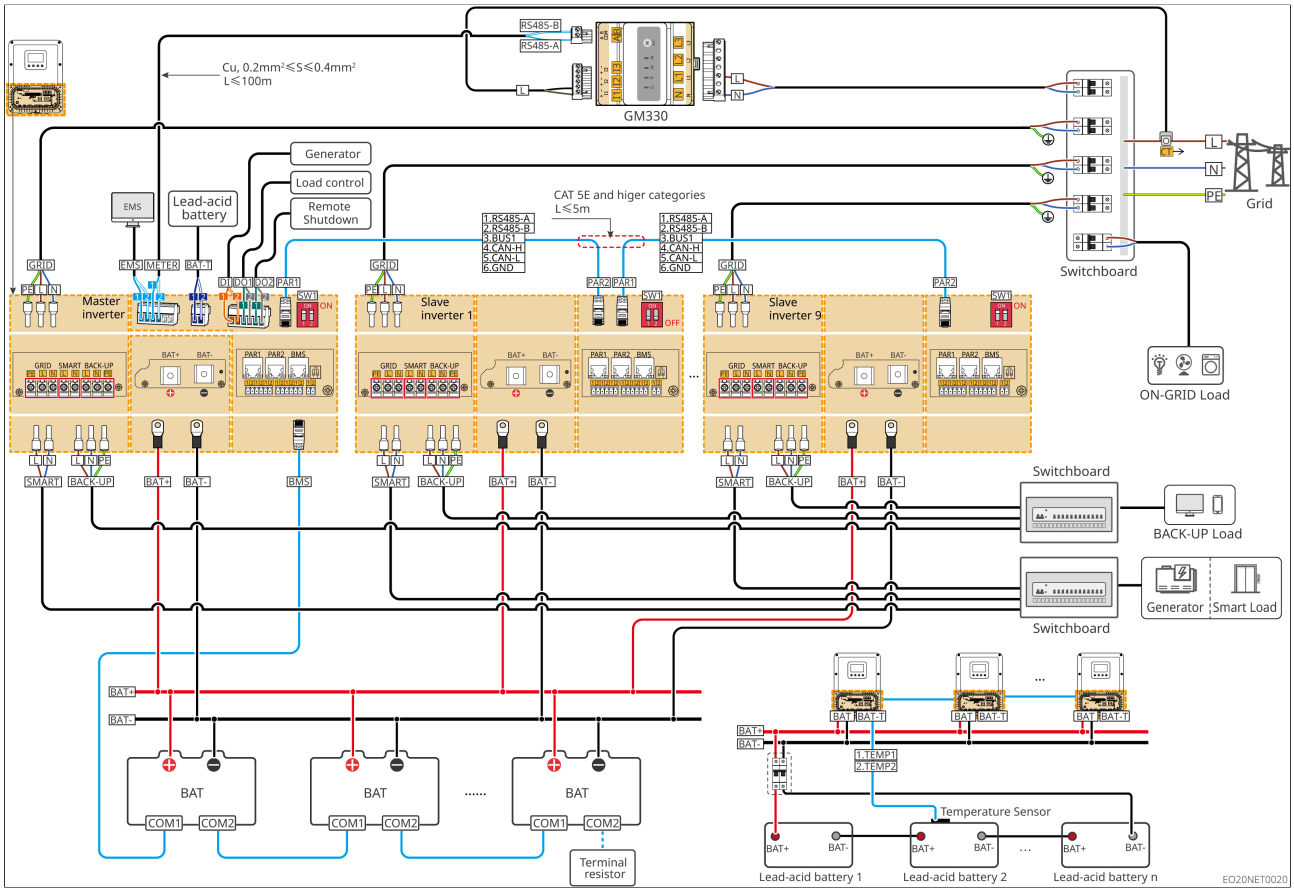

Figure15 With GM330 Scenario

5.2.3 Detailed Wiring Diagram for Single-Phase to Three-Phase System

NOTICE

- When configuring a single-phase inverter into a three-phase system, set the inverter in parallel mode as the master inverter via the LCD screen or connected App, with the others as slave inverters.
- In a single-phase inverter three-phase system, a meter or CT must be connected to enable power monitoring functionality.
- The single-phase inverter three-phase system only supports battery busbar access.
- The three-phase system only supports connection to a three-phase generator.
- The following diagrams focus on the wiring related to the three-phase configuration. For wiring requirements of other ports, please refer to the single-unit system.

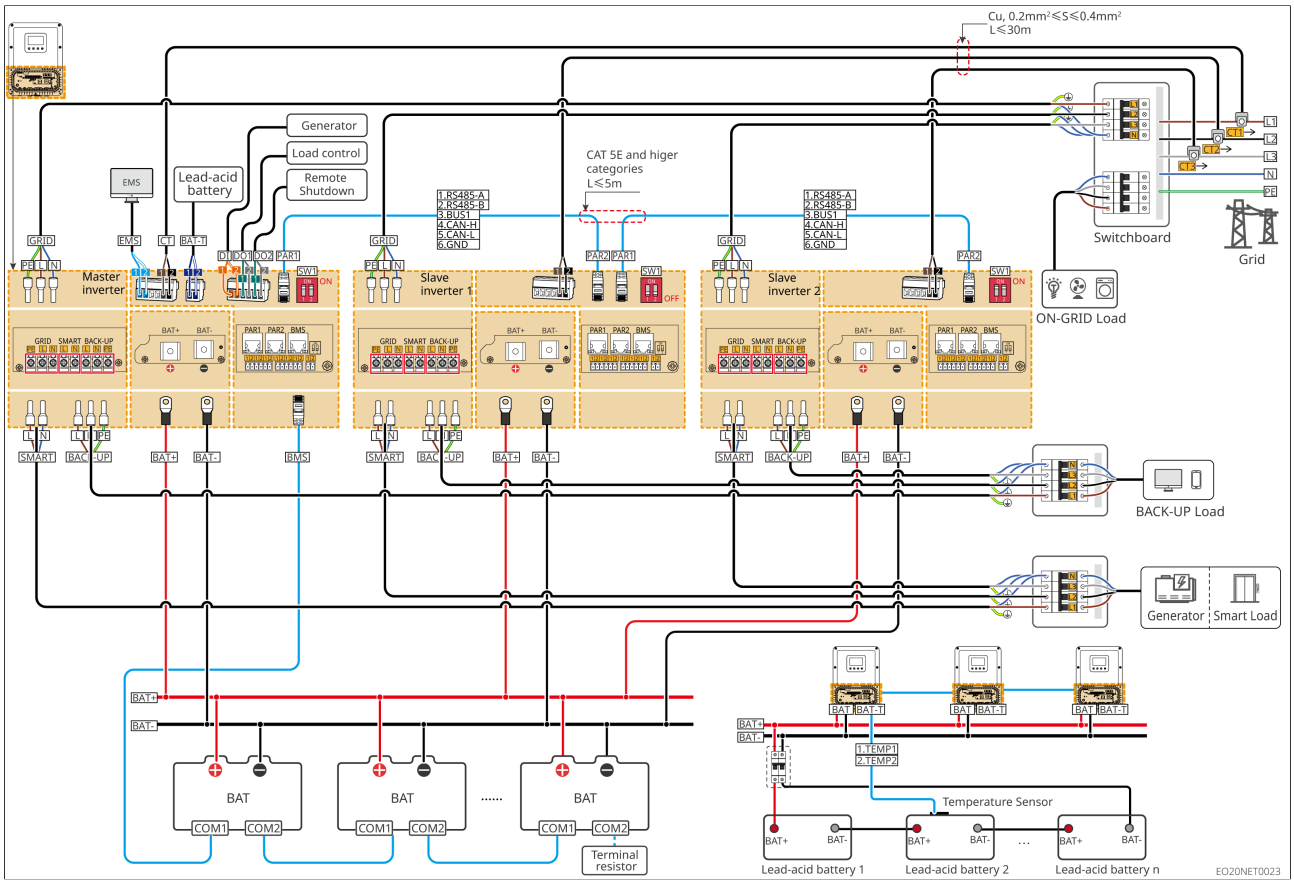

Figure16 CT Application Scenario

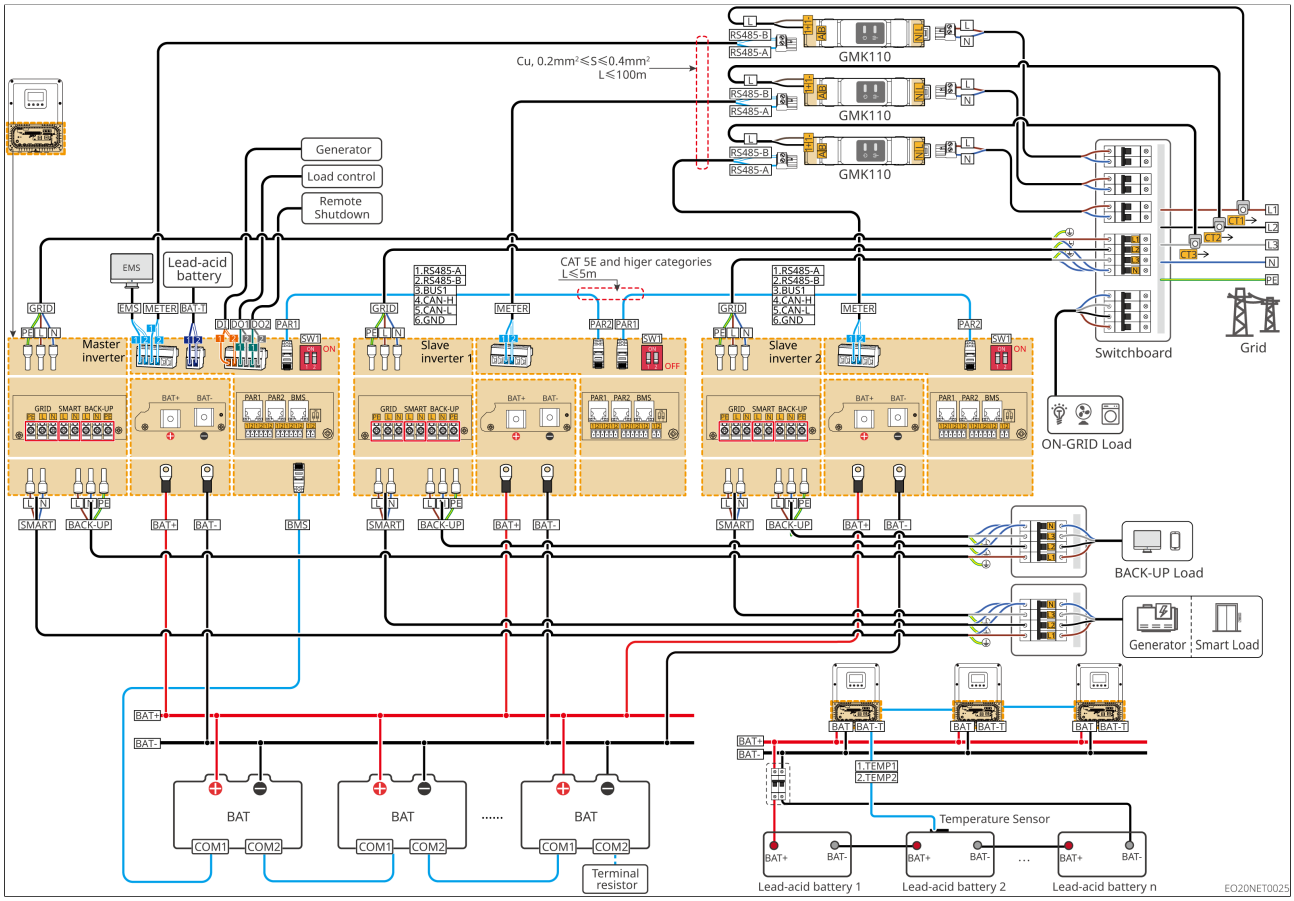

Figure17 GMK110 Application Scenario

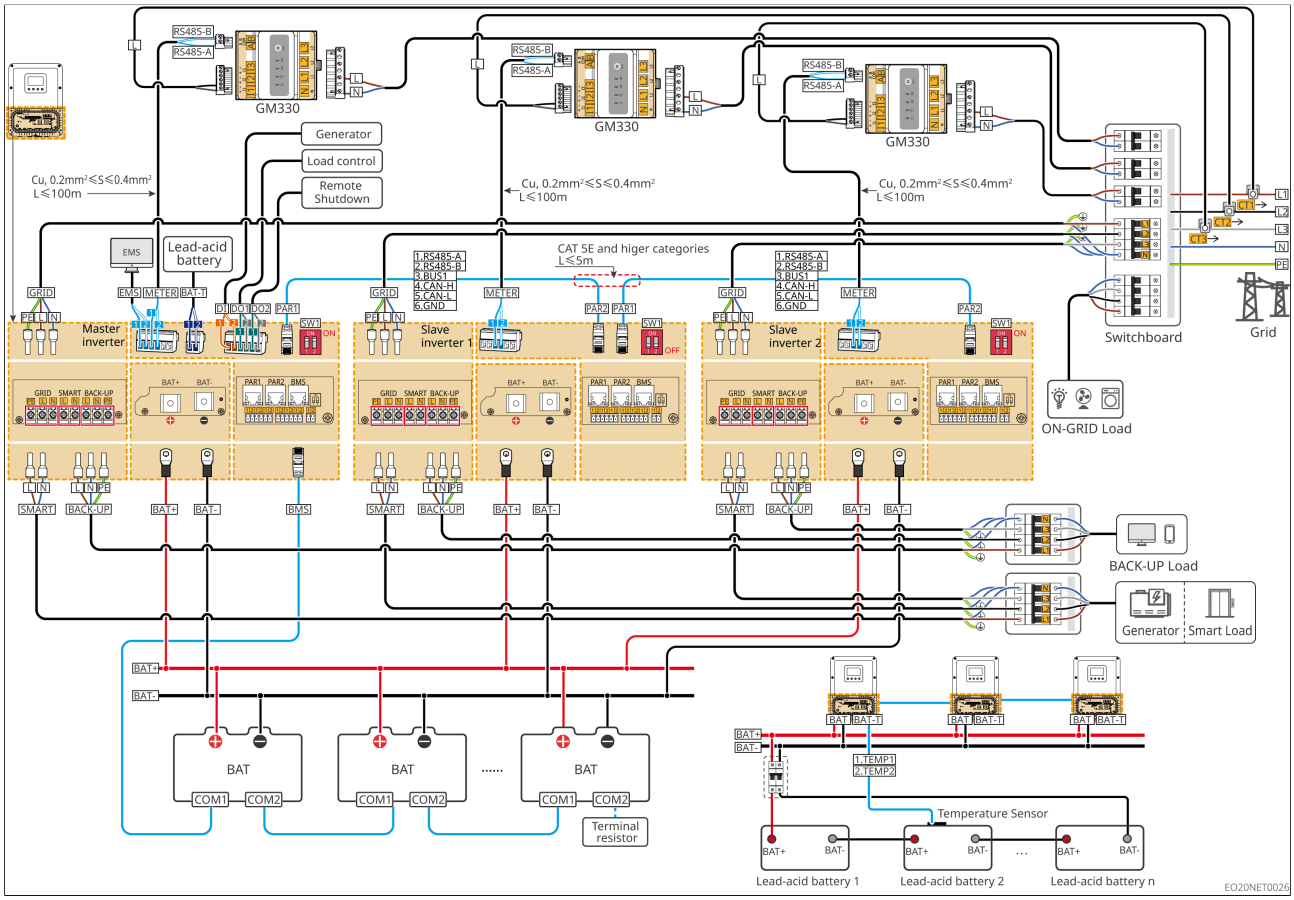

Figure18 GM330 Application Scenario

5.3 Preparing Materials

⚠WARNING

- Do not connect loads between the inverter and the AC switch directly connected to the inverter.
- Each inverter must be equipped with an AC output circuit breaker. Multiple inverters must not be connected to a single AC circuit breaker simultaneously.
- To ensure the inverter can safely disconnect from the grid in case of an abnormal situation, please install an AC circuit breaker on the AC side of the inverter. Select a suitable AC circuit breaker according to local regulations.
- When the inverter is powered on, the BACK-UP AC port is live. If maintenance is required on the BACK-UP Loads, power down the inverter first, otherwise electric shock may occur.
- For cables used within the same system, it is recommended that the following are consistent: conductor material, cross-sectional area, length, etc.
  - BACK-UP AC cables for each inverter
  - ON-GRID AC cables for each inverter
  - Power cables between the inverter and the battery
  - Power cables between batteries
  - Power cables between the inverter and the busbar
  - Power cables between the battery and the busbar

5.3.1 Preparing Breakers

No.	breaker	Recommended Specifications	Remarks
1	• ON-GRID breaker • BACK-UP Loads breaker • SMART breaker	• GW3K-EO-G20, GW3.6K-EO-G20: Rated Current ≥40A, Nominal Voltage ≥230V • GW5K-EO-G20, GW6K-EO-G20: Rated Current ≥50A, Nominal Voltage ≥230V	Self-provided

No.	breaker	Recommended Specifications	Remarks
2	PV breaker	• Rated Current ≥32A • Nominal Voltage ≥600V	Self-provided
3	Battery Switch	Select according to local laws and regulations • GW3K-EO-G20: Rated Current ≥90A, Nominal voltage ≥60V • GW3.6K-EO-G20: Rated Current ≥115A, Nominal Voltage ≥60V • GW5K-EO-G20: Rated Current ≥150A, Nominal Voltage ≥60V • GW6K-EO-G20: Rated Current ≥175A, Nominal Voltage ≥60V	Self-provided
4	RCD	RCD Device Installation and RCD Specification Selection: It is recommended to connect a Type A RCD with a residual current trip level ≥300mA externally to the AC output side of the inverter (for inverter capacity <30kVA, select a residual current operating level of 300mA; for inverter capacity ≥30kVA, select a residual current operating level of 10mA/kVA). Alternatively, select an appropriate RCD specification according to local regulatory requirements.	Self-provided

5.3.2 Preparing Cables

No.	Cable	Recommended Specification	Acquisition Method
1	Inverter Protective Ground Wire	• Single-core outdoor copper cable • Conductor cross-sectional area: S=6mm^2	Self-provided

No.	Cable	Recommended Specification	Acquisition Method
2	Battery Protective Ground Wire	• Single-core outdoor copper cable • Conductor cross-sectional area: • LX A5.0-10: 4-6mm² • LX A5.0-30: 10mm² • GW16.1-BAT-LV-G10: 10mm²	• LX A5.0-30, LX A5.0-10: Acquired via accessory (Optional) • GW16.1-BAT-LV-G10: Acquired via accessory (standard-equipped)
3	PV DC Cable	• Industry-standard outdoor PV cable • Conductor cross-sectional area: 4-6mm² • Cable outer diameter: 4mm-7mm	Self-provided
4	Battery DC Cable	• Single-core outdoor copper cable • Inverter battery port wiring requirements: ◦ Conductor cross-sectional area: 25-35mm² ◦ Cable outer diameter: 8-13mm • Cable requirements between battery and battery: ◦ LX A5.0-10 conductor cross-sectional area: 25mm² ◦ LX A5.0-30 conductor cross-sectional area: 35mm² ◦ GW16.1-BAT-LV-G10 conductor cross-sectional area: 50mm²	• LX A5.0-30, LX A5.0-10: Acquired via accessory (Optional) • GW16.1-BAT-LV-G10: Acquired via accessory (standard-equipped)

No.	Cable	Recommended Specification	Acquisition Method
5	AC Cable	• Inverter AC input/output cable (BACK-UP/GRID): ◦ Conductor cross-sectional area: 6mm² ◦ Multi-core outdoor copper cable outer diameter: 14-16mm • SMART cable: ◦ Conductor cross-sectional area: 6mm² ◦ Multi-core outdoor copper cable outer diameter: 13mm-15mm	Self-provided
6	Smart Meter Power Cable	• Outdoor copper cable • Conductor cross-sectional area: 1mm²	Self-provided
7	Battery Communication Cable, Inverter Parallel Communication Cable	Communication between batteries requires the use of CAT 5E or higher specification standard shielded network cable and RJ45 shielded connectors.	• Self-provided • LX A5.0-10, LX A5.0-30: Acquired via accessory (Optional)
8	Meter RS485 Communication Cable	• Shielded twisted pair • Conductor cross-sectional area: 0.2mm²-0.4mm²	Self-provided
9	DO/DI/CT Communication Cable	• Copper twisted pair • Conductor cross-sectional area: 0.2mm²-0.4mm²	Self-provided

5.4 Removing the Inverter Chassis Lower Cover

NOTICE

- Use the specified tool (wrench) to open the inverter's lower enclosure cover. The removed cover, wrench, and fastening screws should be properly stored for subsequent reinstallation.
- It is prohibited to open the cover during rain or snow. If it is absolutely necessary to open it under special circumstances, reliable protective measures (such as setting up a temporary rain shelter) must be taken to ensure no rain or snow enters the maintenance cavity; otherwise, operation is strictly forbidden.
- It is prohibited to open the inverter's upper enclosure cover.

Remove the inverter chassis lower cover:

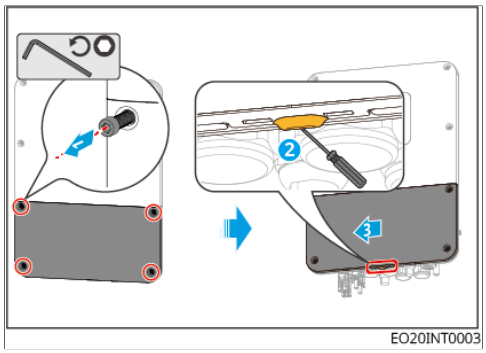

Figure19 Removing the Lower Cover

(Optional) Using the gland unlocking tool:

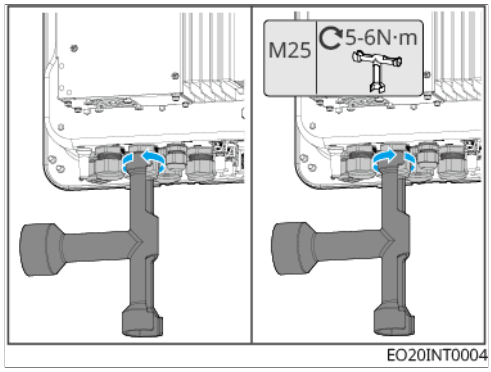

Figure20 Securing and Removing the Gland

5.5 Connecting the PE cable

⚠WARNING

- The protective grounding of the chassis enclosure cannot replace the protective ground wire of the AC output port. When wiring, ensure the protective ground wires at both locations are reliably connected.
- For multiple devices, ensure all protective grounding points on the device chassis enclosures are equipotentially connected.
- To improve the corrosion resistance of the terminals, it is recommended to apply silicone grease or paint to the exterior of the grounding terminals for protection after the protective ground wire installation is complete.
- When installing the device, the protective ground wire must be installed first; when removing the device, the protective ground wire must be removed last.

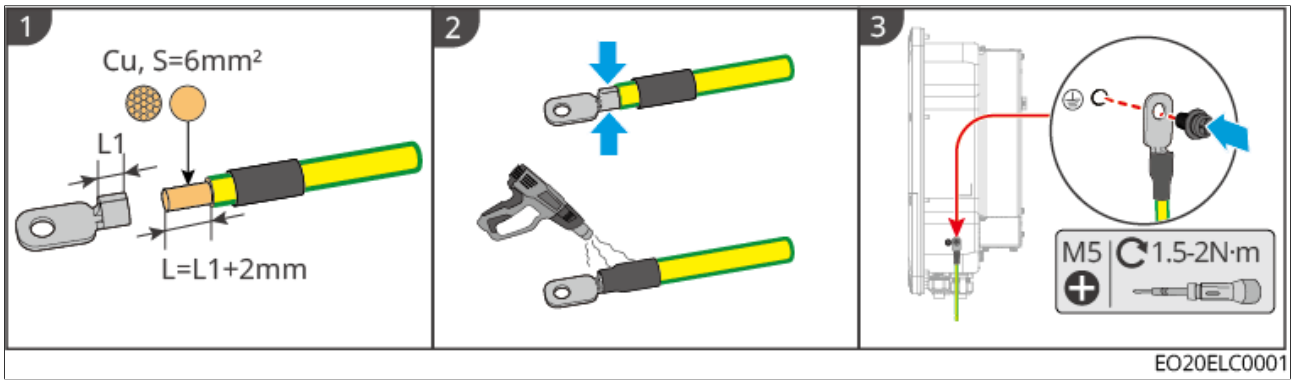

Figure21 Inverter Grounding

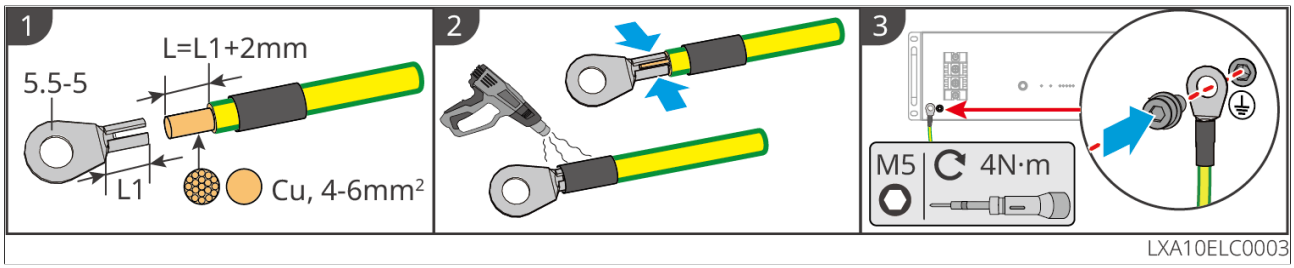

Figure22 LX A5.0-10 Battery Grounding

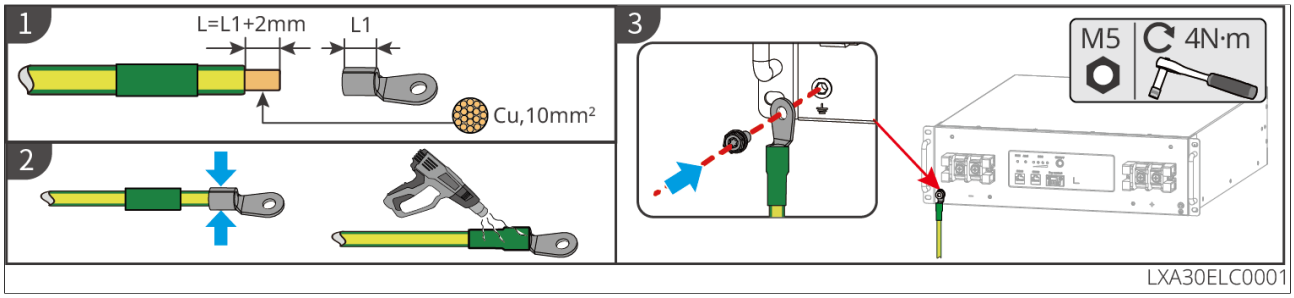

Figure23 LX A5.0-30 Battery Grounding

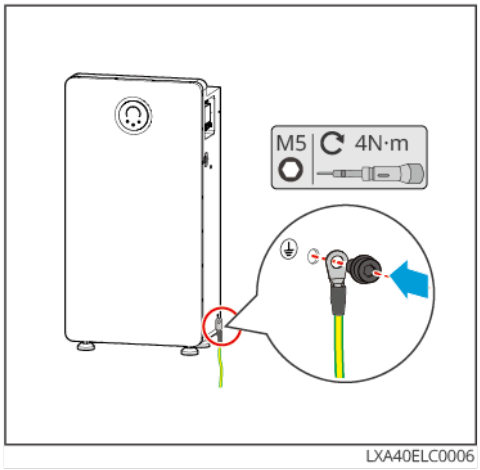

Figure24 GW16.1-BAT-LV-G10 Battery Grounding

5.6 Connecting the PV Cable

⚠DANGER

- Do not connect the same PV string to multiple inverters, as this may cause inverter damage.
- Before connecting the PV string to the inverter, confirm the following information. Failure to do so may cause permanent damage to the inverter, and in severe cases, may lead to fire resulting in personal injury and property loss.
  1. Ensure that the maximum short-circuit current and maximum input voltage for each MPPT are within the allowable range of the inverter.
  2. Ensure that the positive terminal of the PV string is connected to the inverter's PV+, and the negative terminal of the PV string is connected to the inverter's PV-.

⚠WARNING

- PV string output does not support grounding. Before connecting the PV string to the inverter, ensure that the minimum insulation resistance to ground of the PV string meets the minimum insulation impedance requirement (R = Max. Input Voltage / 30mA).
- After completing the DC cable connection, ensure that the cable connections are tight and not loose.
- Use a multimeter to measure the positive and negative poles of the DC cable to ensure correct polarity without reverse connection; and ensure the voltage is within the allowable range.

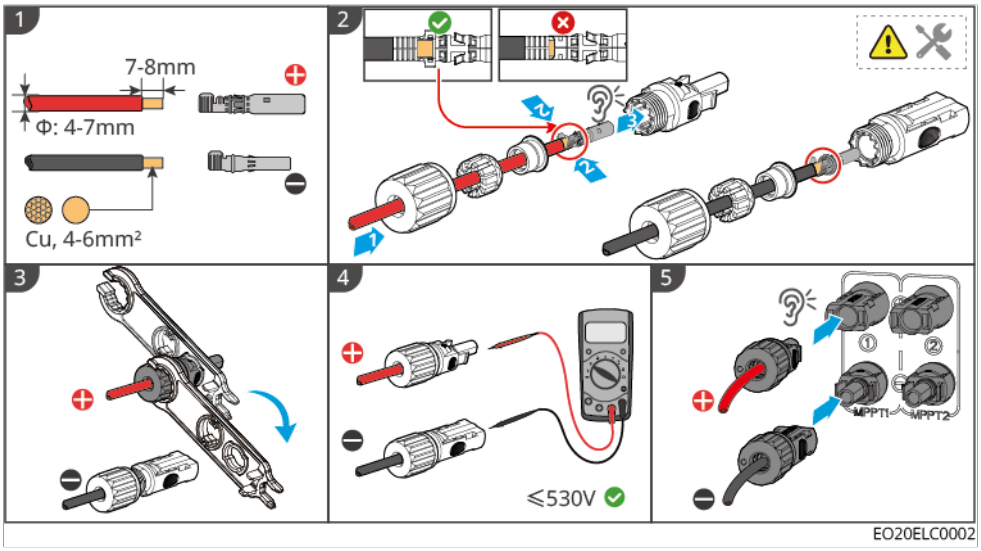

Figure25 Connecting the PV Cable

To disassemble the PV terminal, please refer to the following steps:

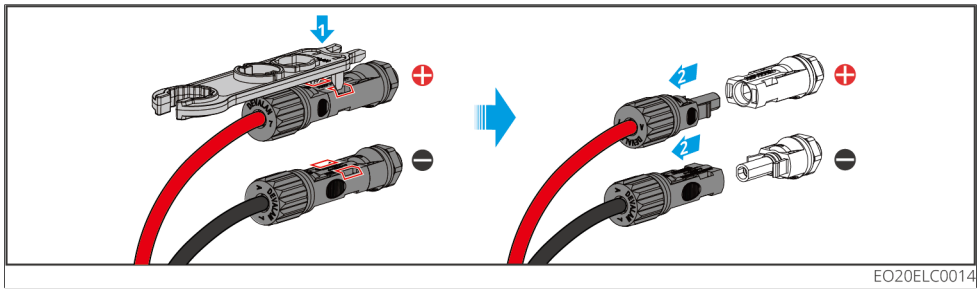

Figure26 Disassembling the PV terminal

5.7 Connecting the Battery Cable

⚠DANGER

- In a standalone system, do not connect the same battery bank to multiple inverters, as this may cause inverter damage.
- Do not connect any load between the inverter and the battery.
- Use insulated tools when connecting battery cables to prevent accidental electric shock or battery short circuit.
- Ensure the battery open-circuit voltage is within the inverter's allowable range.
- Regarding the DC switch between the inverter and the battery, please decide whether to install it based on local laws and regulations.

NOTICE

- The battery system wiring diagram only shows wiring for some model devices. Please refer to the corresponding wiring guidance chapter for the actual device used for wiring.
- When using the battery busbar access mode in parallel and single-phase to three-phase systems, connect the battery management system (BMS) communication cable to the main inverter's BMS port.
- When the battery in a parallel system is not busbar accessed, connect each group of battery management system (BMS) communication cables to the corresponding inverter's BMS port respectively.

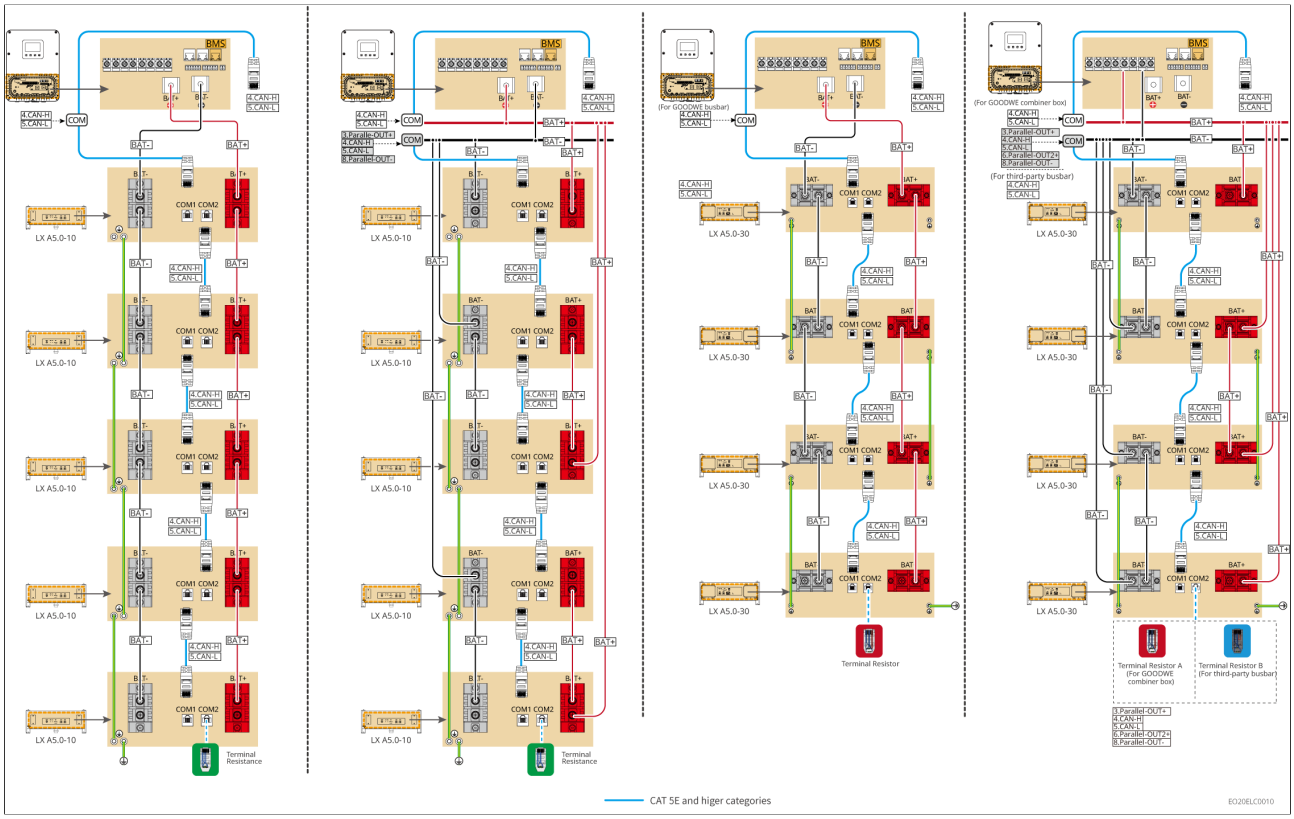

Figure27 Battery System Wiring Diagram 1

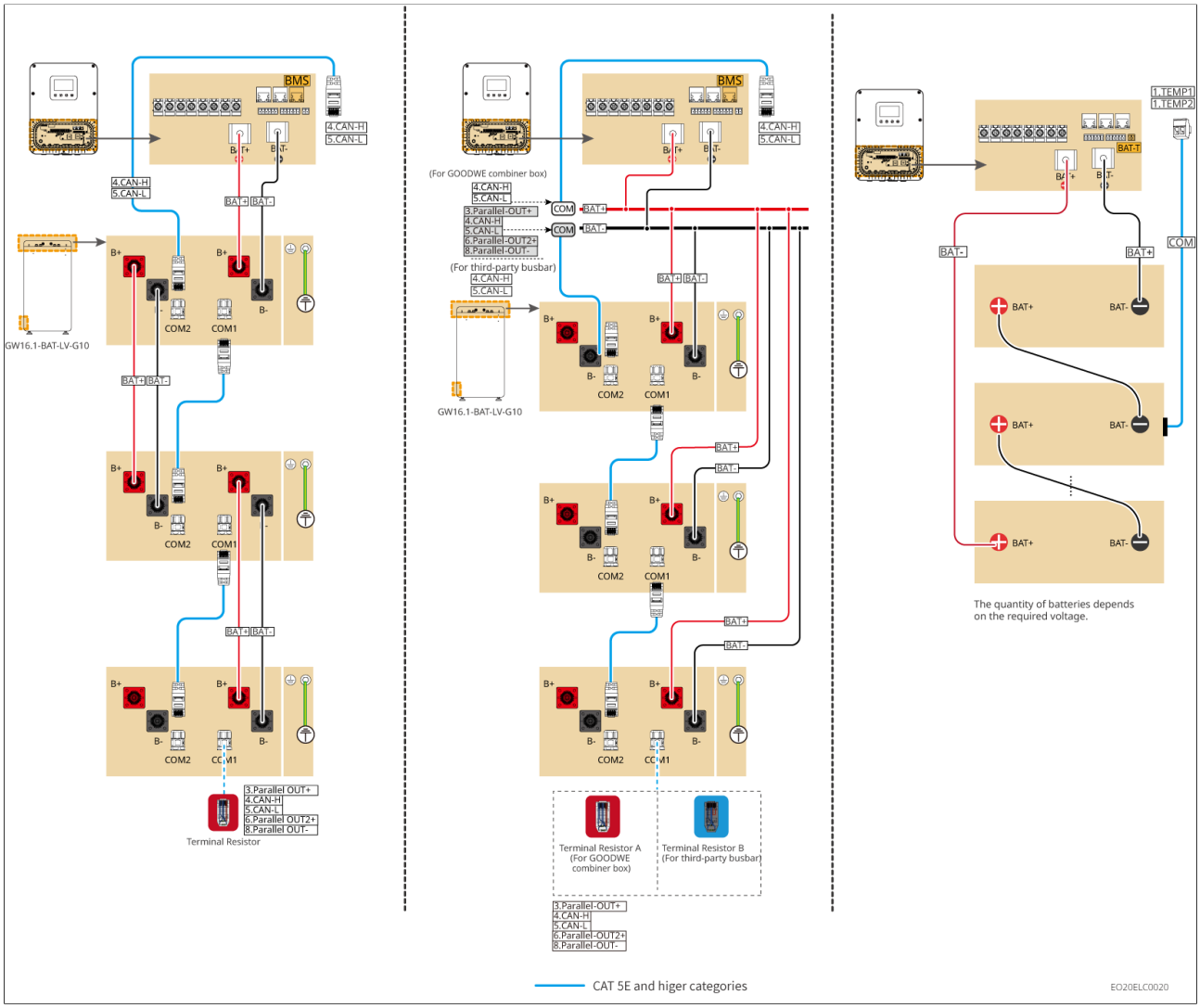

Figure28 Battery System Wiring Diagram 2

LXA5.0-30

- Daisy-chain connection: Supports a maximum of 1 inverter and 30 batteries

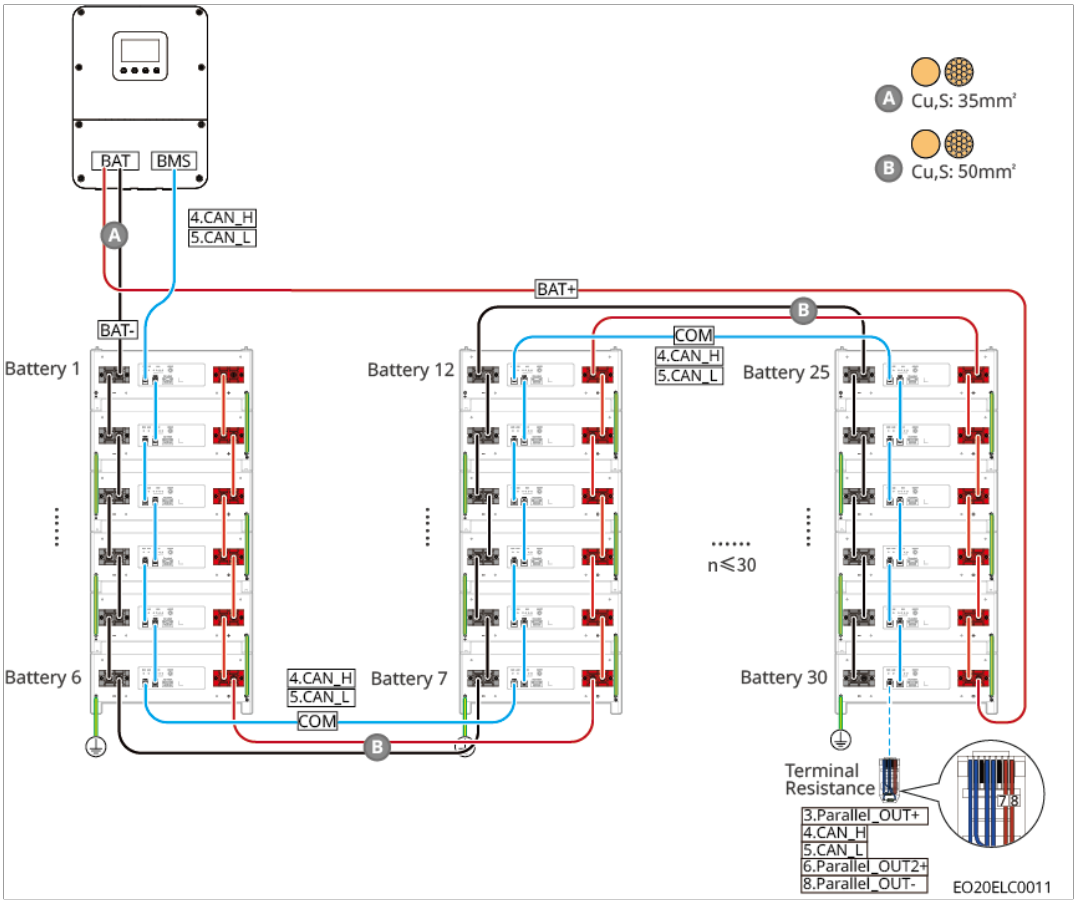

Figure29 LXA5.0-30: Daisy-chain Connection Method

- BCB-22-WW-0 Combiner Box wiring: Supports a maximum of 6 inverters and 6 batteries

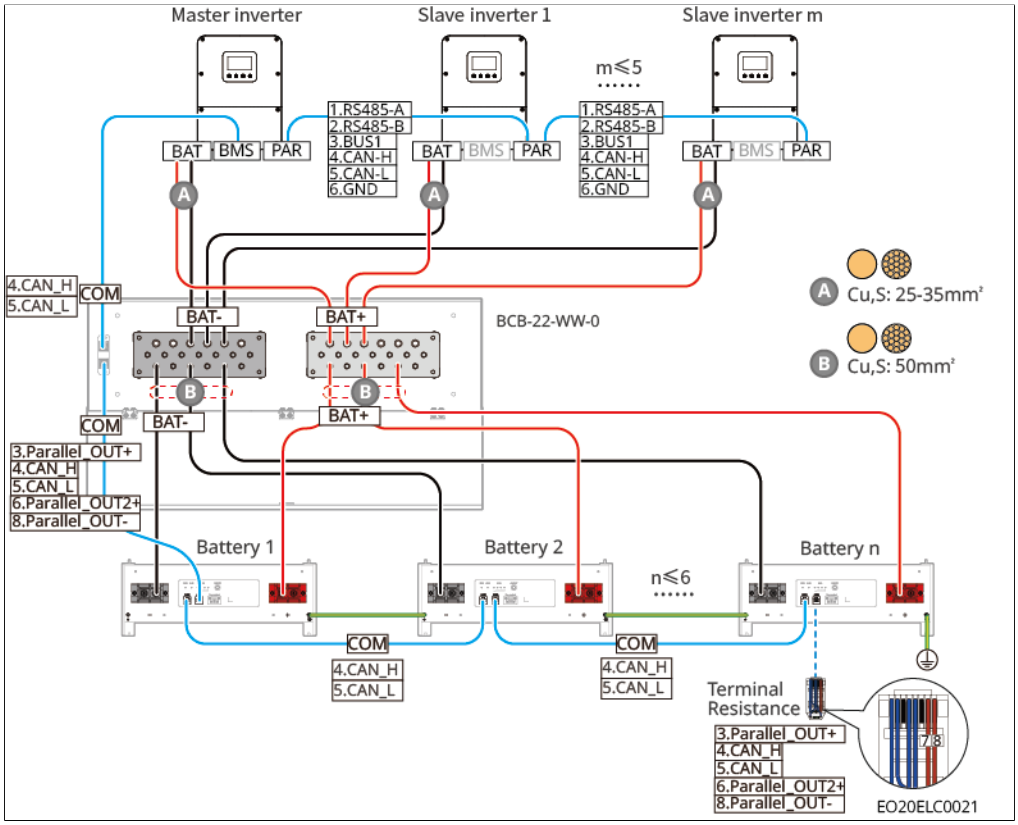

- BCB-32-WW-0 Combiner Box wiring: Supports a maximum of 6 inverters and 15 batteries

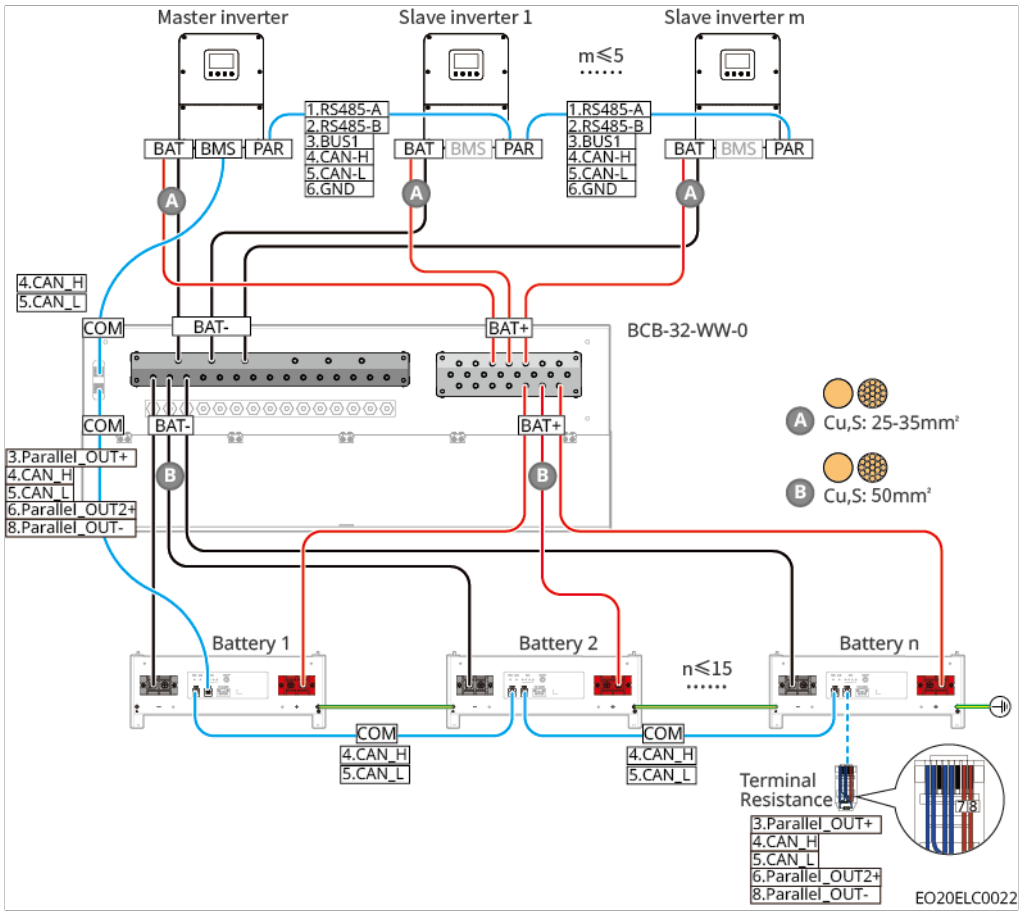

Figure30 LXA5.0-30: BCB-32-WW-0 Combiner Box

- Third-party busbar wiring: Supports a maximum of 10 inverters and 30 batteries

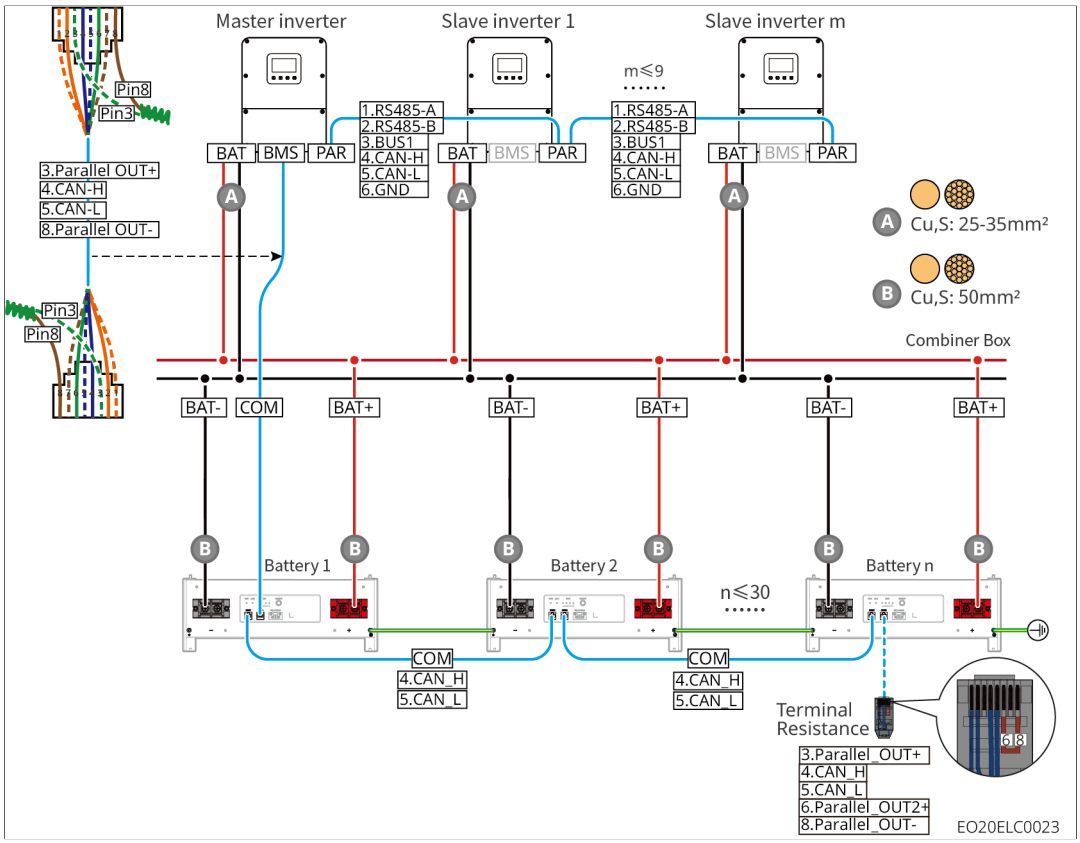

Figure31 LXA5.0-30: Third-party Busbar

LX A5.0-10

- Daisy-chain connection: Supports a maximum of 1 inverter and 2 batteries

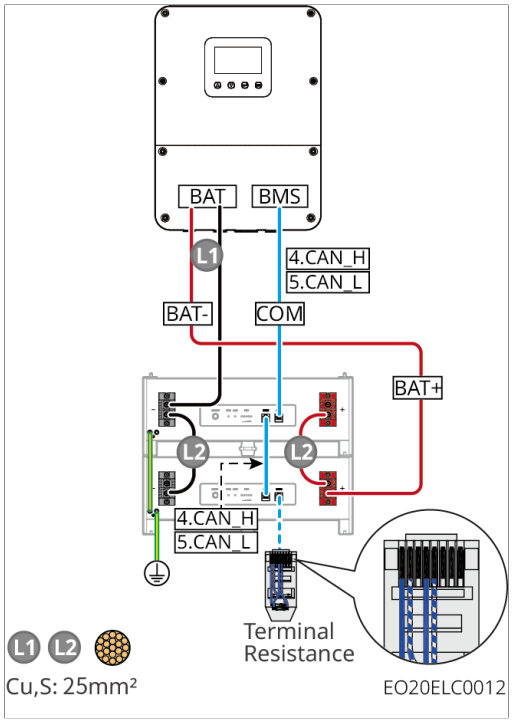

Figure32 LX A5.0-10: Daisy-chain Connection Method

- BCB-11-WW-0 Combiner Box wiring: Supports a maximum of 3 inverters and 6 batteries

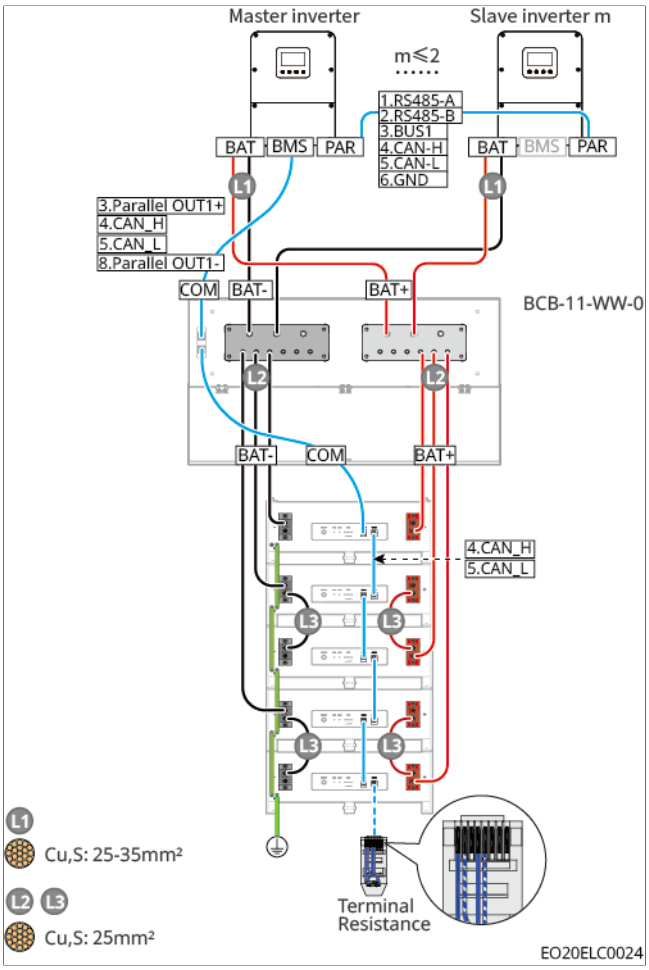

Figure33 LX A5.0-10: BCB-11-WW-0 Combiner Box

- BCB-22-WW-0 Combiner Box wiring: Supports a maximum of 6 inverters and 12 batteries

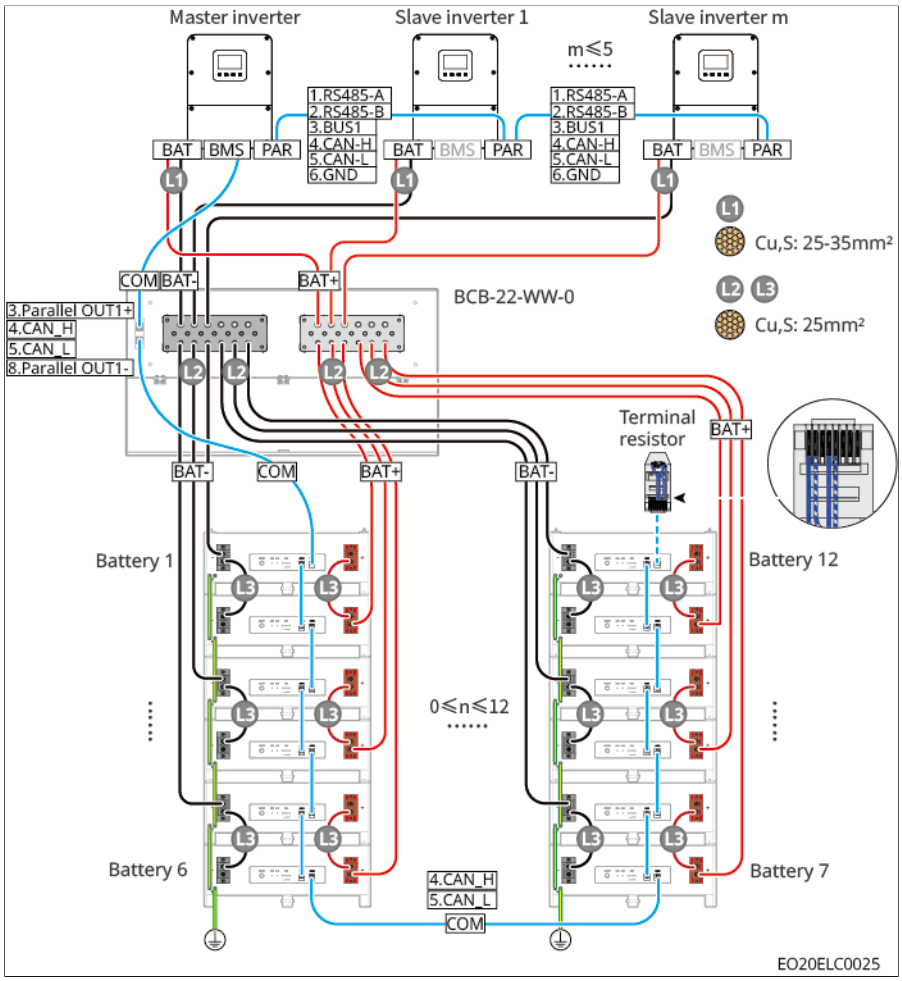

Figure34 LX A5.0-10: BCB-22-WW-0 Combiner Box

- BCB-32-WW-0 Combiner Box wiring: Supports a maximum of 6 inverters and 12 batteries

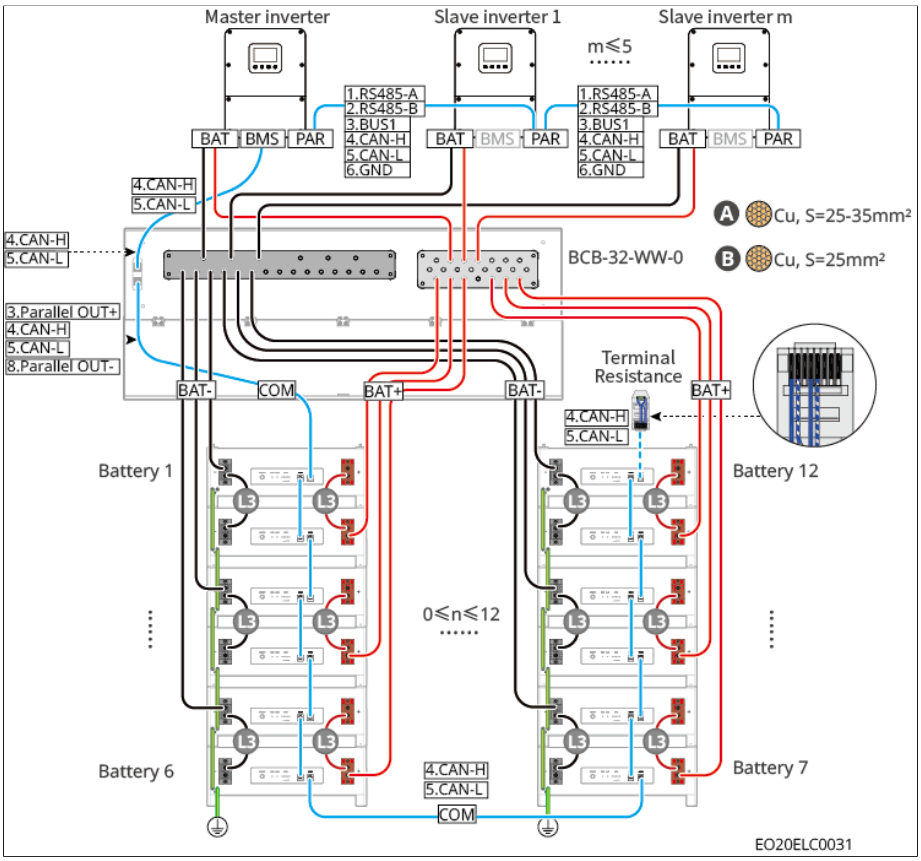

Figure35 LX A5.0-10: BCB-32-WW-0 Combiner Box

- Third-party busbar wiring: Supports a maximum of 10 inverters and 15 batteries

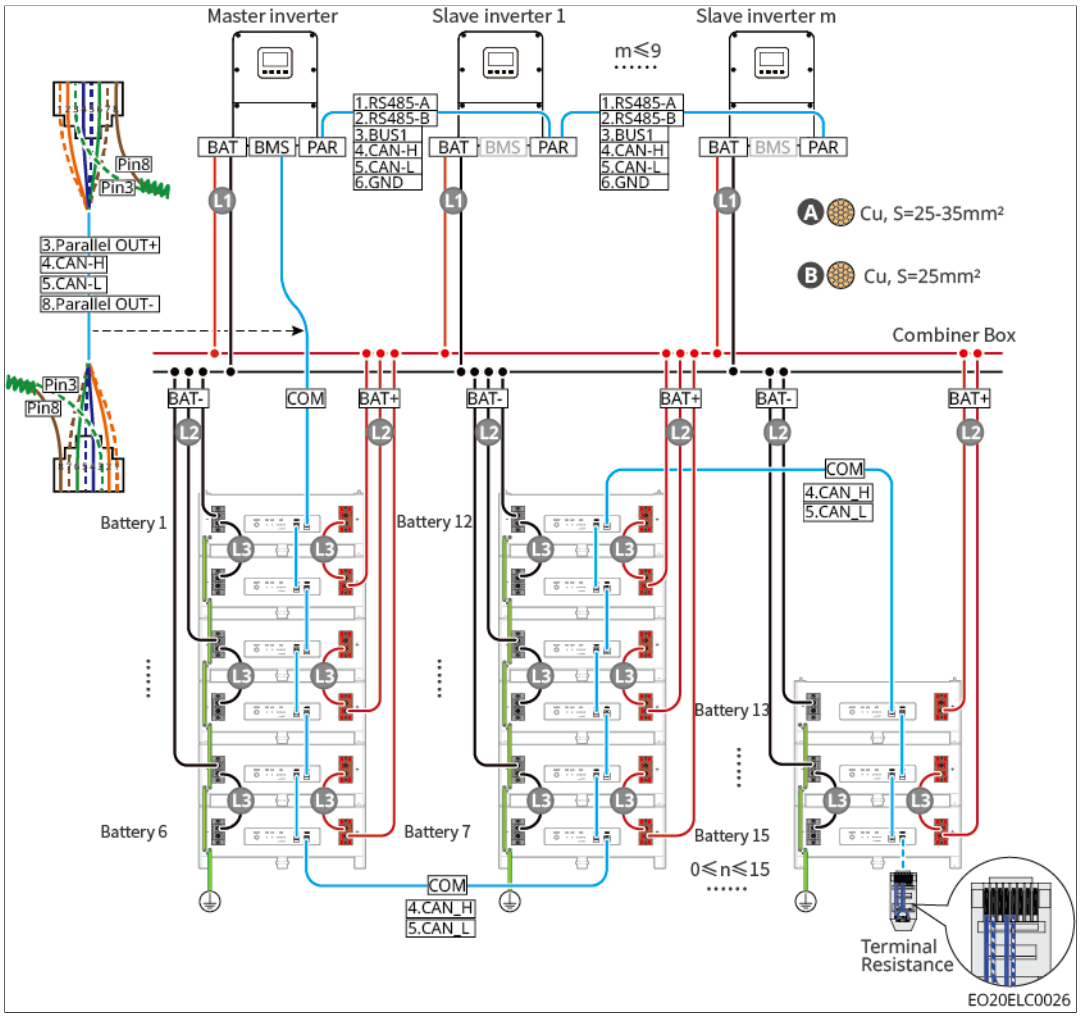

Figure36 LX A5.0-10: Third-party Busbar

GW16.1-BAT-LV-G10

- Daisy-chain connection: Supports a maximum of 1 inverter and 30 batteries

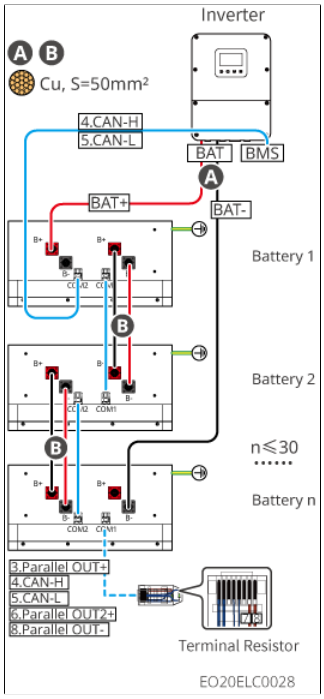

Figure37 GW16.1-BAT-LV-G10: Daisy-chain Wiring Method

- BCB-32-WW-0 Combiner Box wiring: Supports a maximum of 6 inverters and 15 batteries

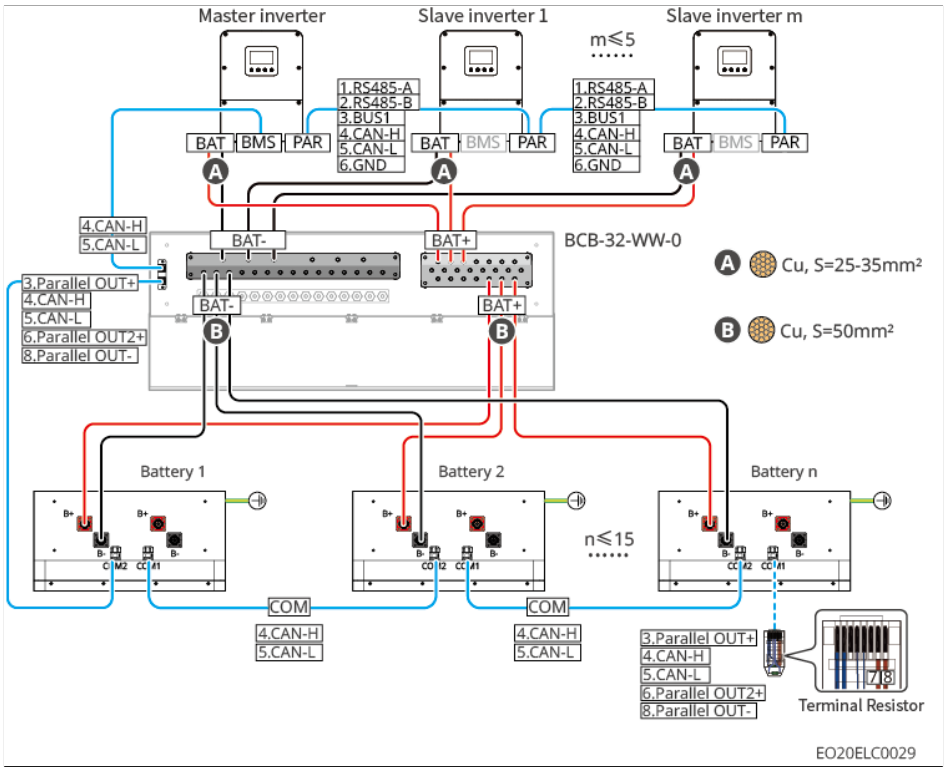

Figure38 GW16.1-BAT-LV-G10: BCB-32-WW-0 Combiner Box

- Third-party busbar wiring: Supports a maximum of 10 inverters and 30 batteries

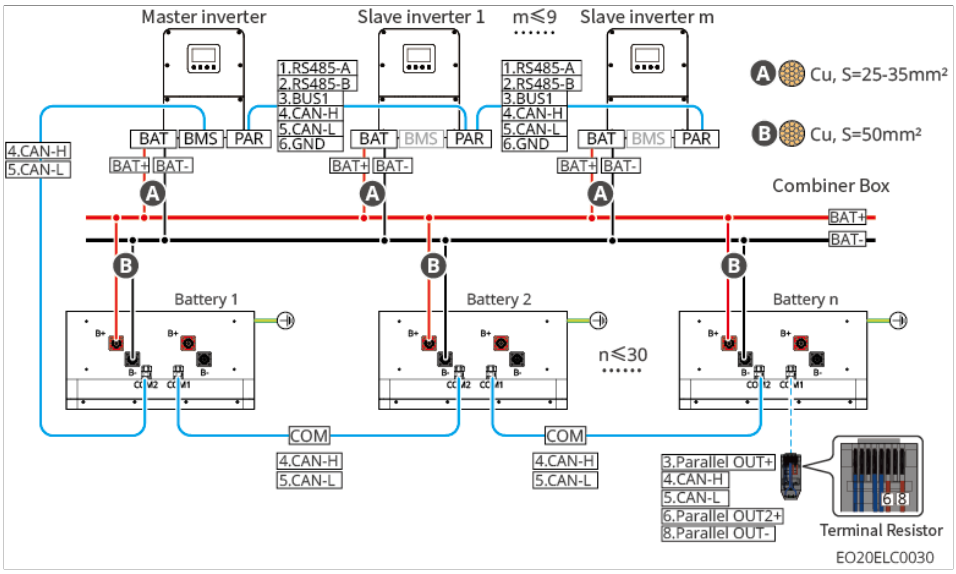

Figure39 GW16.1-BAT-LV-G10: Third-party Busbar

PIN	COM1	COM2	Description
1	-	-	Reserved
2	-	-	
3	Parallel OUT+	Parallel OUT+	Battery parallel cluster communication port
4	CAN_1H	CAN_1H	Connects to inverter communication or battery parallel cluster communication port
5	CAN_1L	CAN_1L	
6	Parallel OUT2+	Parallel OUT2+	Battery parallel cluster interlock communication port
7	-	-	Reserved
8	Parallel OUT-	Parallel OUT-	Battery parallel cluster communication port

Table69 **LX A5.0-30 Communication Port Definition**

PIN	COM1	COM2	Description
1	-	-	Reserved
2	-	-	
3	Parallel OUT+	Parallel OUT+	Battery parallel cluster communication port
4	CAN_1H	CAN_1H	Connects to inverter communication or battery parallel cluster communication port
5	CAN_1L	CAN_1L	
6	-	-	Reserved
7	-	-	
8	Parallel OUT-	Parallel OUT-	Battery parallel cluster communication port

Table70 **LX A5.0-10 Communication Port Definition**

PIN	COM1	COM2	Description
1	RS485A	RS485A	Reserved
2	RS485B-	RS485B-	
3	Parallel OUT+	Parallel OUT+	Battery parallel cluster communication port
4	CAN_H	CAN_H	Inverter communication or battery parallel cluster communication port
5	CAN_L	CAN_L	

PIN	COM1	COM2	Description
6	Parallel OUT2+	Parallel OUT2+	Battery parallel cluster communication port
7	-	-	Reserved
8	Parallel OUT-	Parallel OUT-	Battery parallel cluster communication port

Table71 **GW16.1-BAT-LV-G10 Communication Port Definition**

5.7.1 Connecting the Power Cable between the Inverter and Battery

⚠WARNING

- Use a multimeter to measure the positive and negative terminals of the DC cable to ensure correct polarity and no reverse connection; and that the voltage is within the allowable range.
- When wiring, ensure the battery cables match the "BAT+", "BAT-", and ground terminals on the battery end completely. Incorrect cable connection will cause equipment damage.
- Ensure the wire core is fully inserted into the terminal connection hole with no exposed part.
- Ensure the cable connections are tight, otherwise loose connections may cause terminal overheating and equipment damage during operation.
- Do not connect the same battery bank to multiple inverters, as this may cause inverter damage.
- When the inverter is directly connected to the battery, if the length of the power connection cable shipped with the battery is insufficient, please prepare your own cable and remake the connection. When connecting the inverter to various batteries, obtain the OT terminals as follows:
  - GW16.1-BAT-LV-G10: Contact the battery distributor to purchase OT terminals.
  - LX A5.0-10, LX A5.0-30: Use the OT terminals shipped with the inverter.

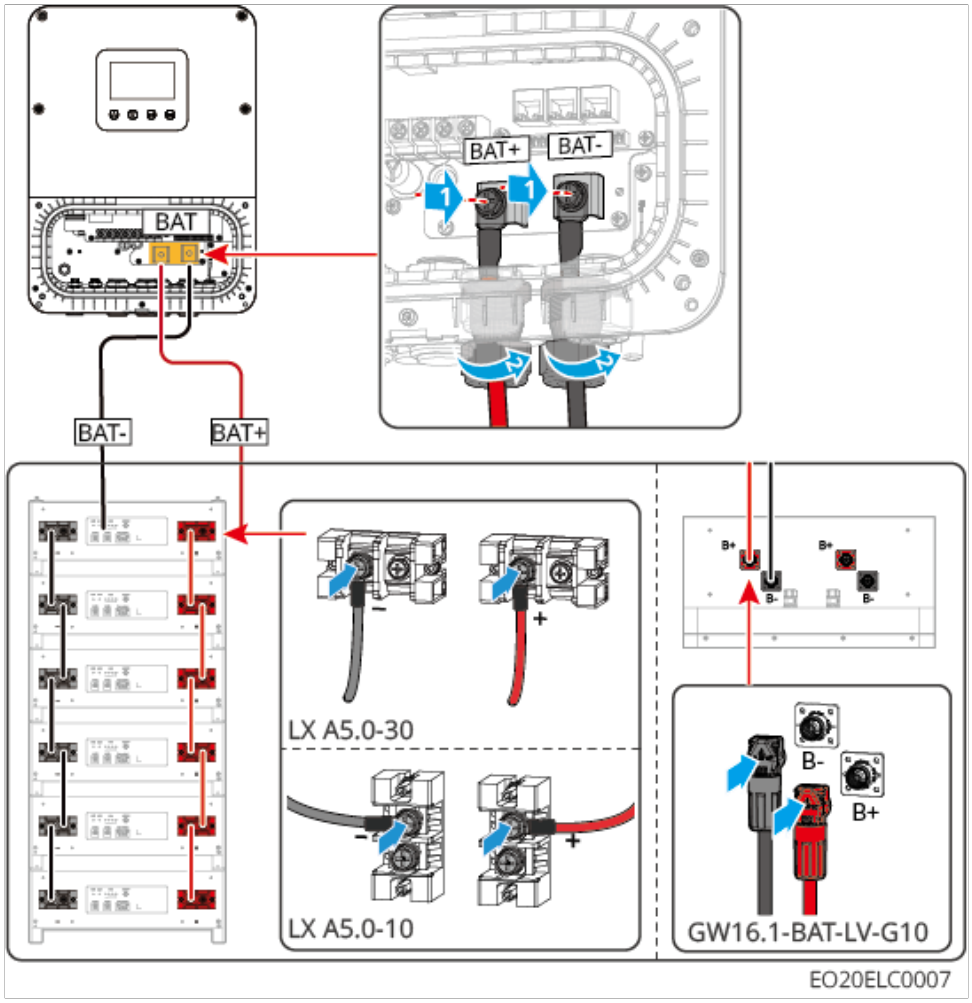

Figure40 Overview of Inverter and Battery Power Cable

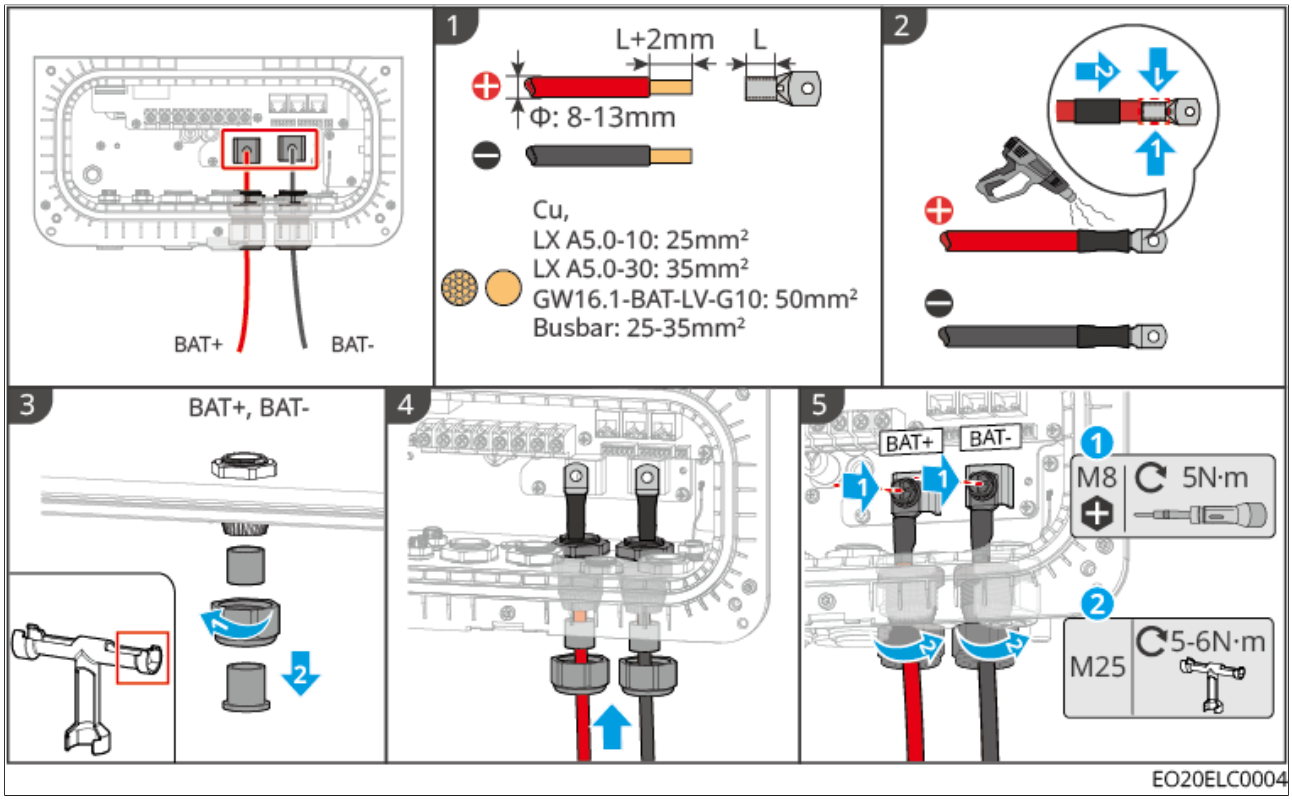

Figure41 Inverter-side Cable Assembly

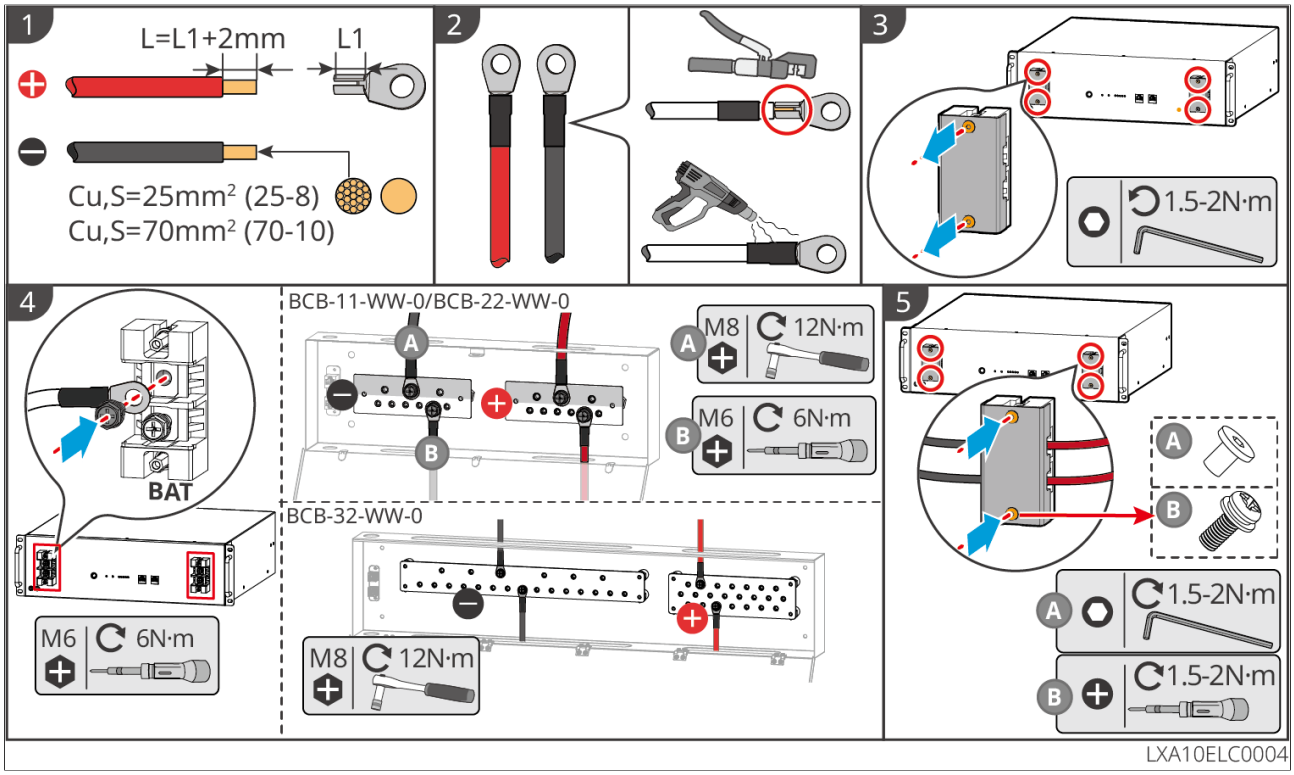

Figure42 Battery-side Cable Assembly Method (LX A5.0-10)

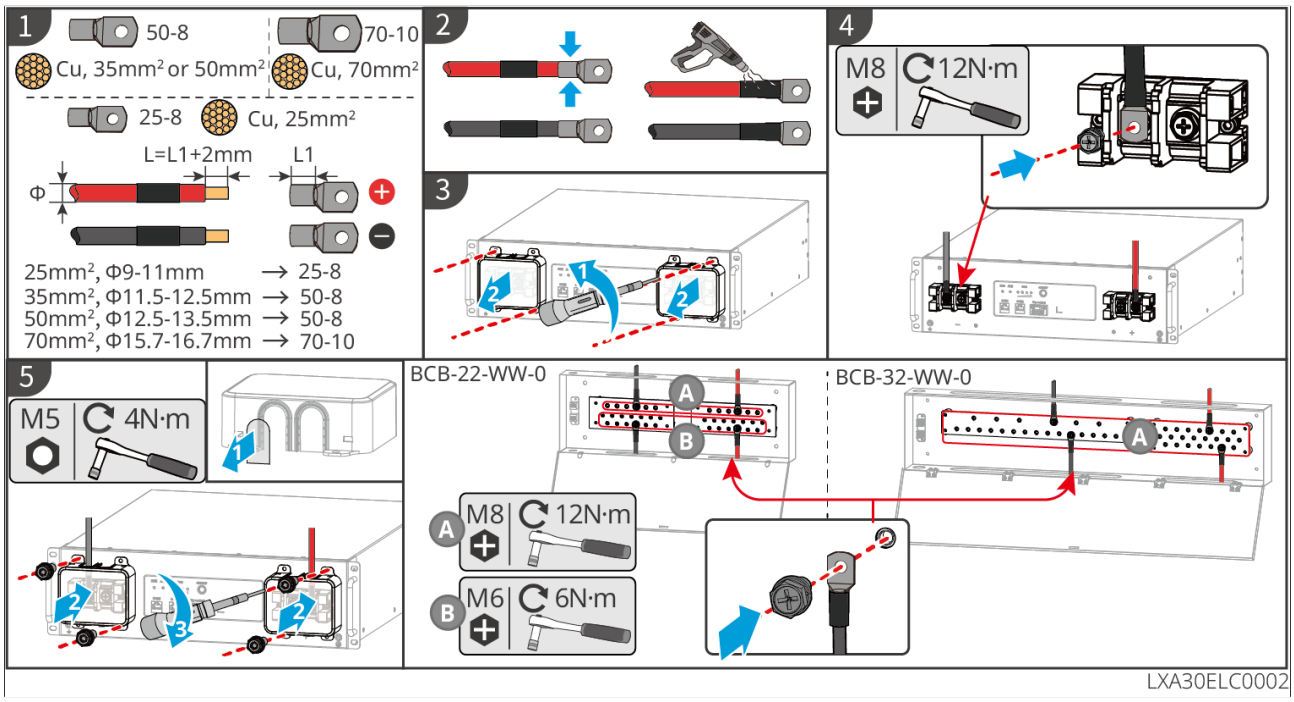

Figure43 Battery-side Cable Assembly Method (LX A5.0-30)

- The GW16.1-BAT-LV-G10 battery ships with a 1-meter positive/negative power cable for the connection between the inverter and battery. If the cable length is insufficient for your actual wiring, please prepare your own cable and follow the steps below to crimp and assemble the cable. Once the cable is assembled, simply plug the battery quick-connect terminal head into the corresponding battery port.

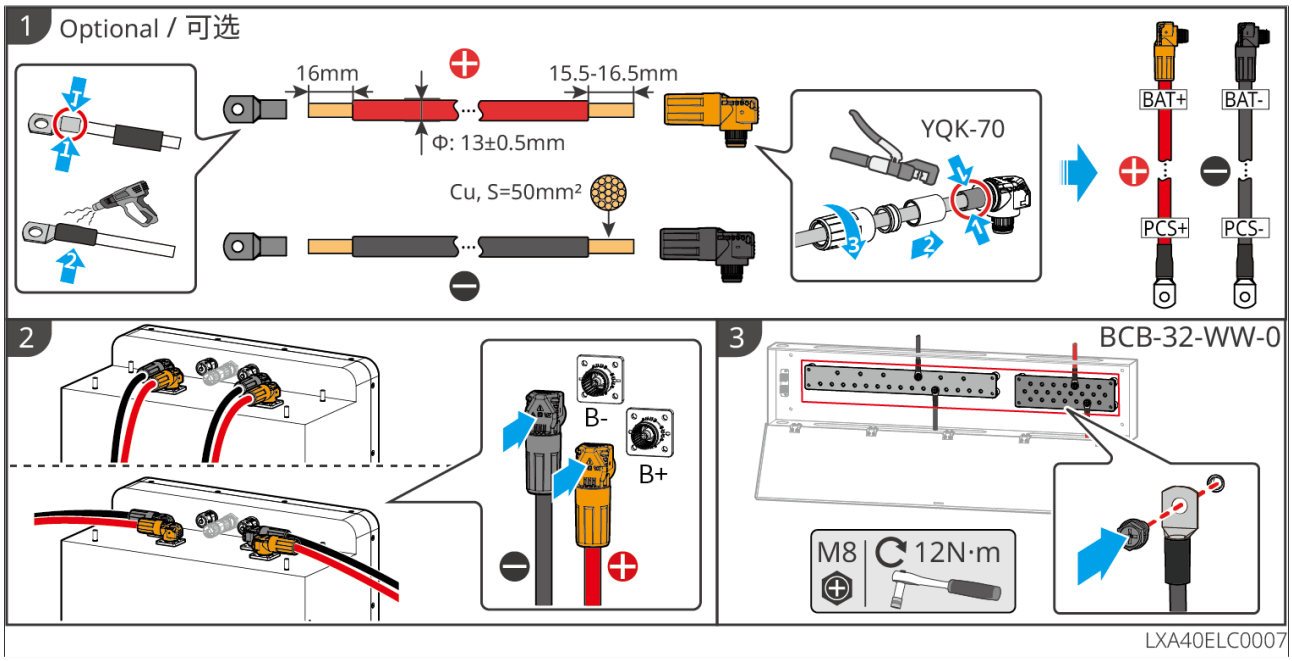

Figure44 Battery-side Cable Assembly Method (GW16.1-BAT-LV-G10)

5.7.2 Connecting the Communication Cable between the Inverter and Battery

NOTICE

- The inverter is supplied with a BMS battery communication cable in the box. It is recommended to use the supplied cable. If the supplied cable does not meet your requirements, please prepare your own shielded network cable and shielded RJ45 connector.
- The LX A5.0-30 and GW16.1-BAT-LV-G10 models come with a built-in terminal resistor. If a third-party busbar is selected, the terminal resistor on the device itself must be removed and replaced with the terminal resistor supplied with the accessory kit.
- For the LX A5.0-10, please use the terminal resistor supplied with the accessory kit.

Instructions for BMS Communication Connection between Inverter and Battery:

Inverter Port	Connected to Battery Port	Port Definition	Description
BMS(CAN)	COM1	4: CAN_H 5: CAN_L	• CAN communication between inverter and battery • Inverter BMS port connected to battery COM1 port

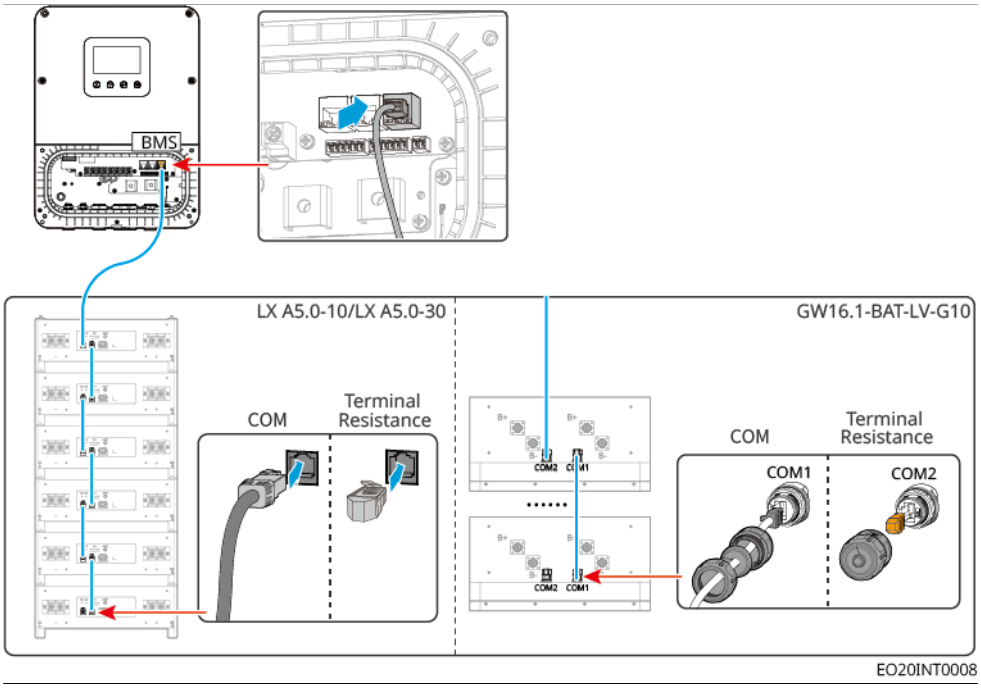

NOTICE

- When connecting the lead-acid battery temperature sensor cable, it is recommended to connect the cable at a location with poorer heat dissipation. For example: when lead-acid batteries are placed side by side, secure the sensor to the middle lead-acid battery.
- To better protect the battery cells, the temperature sampling line must be installed, and it is recommended to place the battery in a well-ventilated environment.

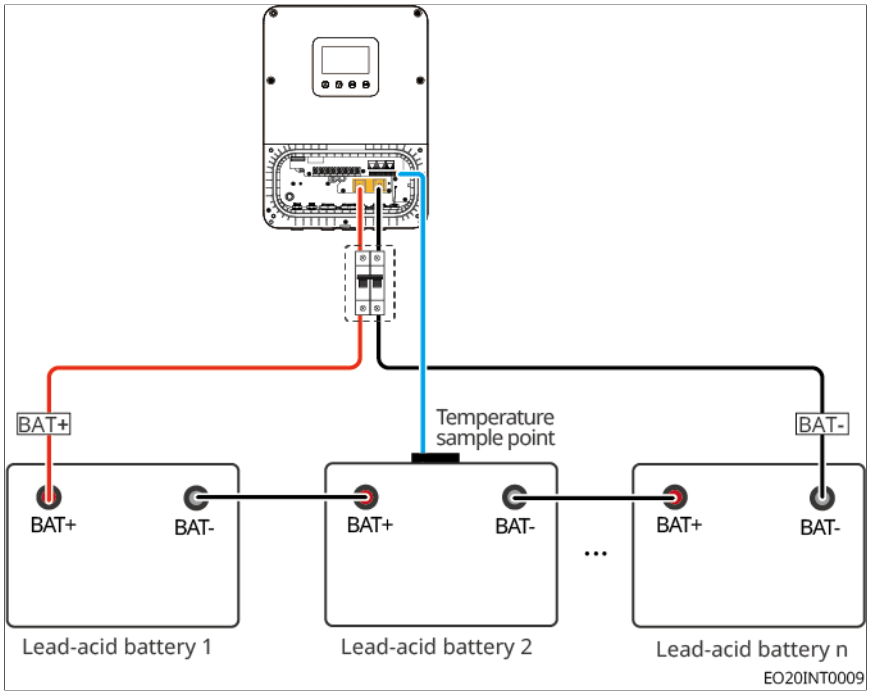

Figure45 Connecting the Temperature Sensor Cable

5.8 Connecting the AC Cable

⚠WARNING

- The inverter integrates a Residual Current Monitoring Unit (RCMU) internally to prevent residual current from exceeding the specified value. When the inverter detects a leakage current greater than the allowable value, it will quickly disconnect from the grid.
- During wiring, ensure the AC cables perfectly match the "BACK-UP", "GRID", "SMART", and grounding ports on the AC terminal block. Incorrect cable connections will cause equipment damage.
- Ensure the wire cores are fully inserted into the terminal wiring holes with no exposed parts.
- Ensure the insulation plate at the AC terminal block is securely fastened and not loose.
- Ensure all cable connections are tight. Loose connections may cause terminal overheating during equipment operation, leading to equipment damage.

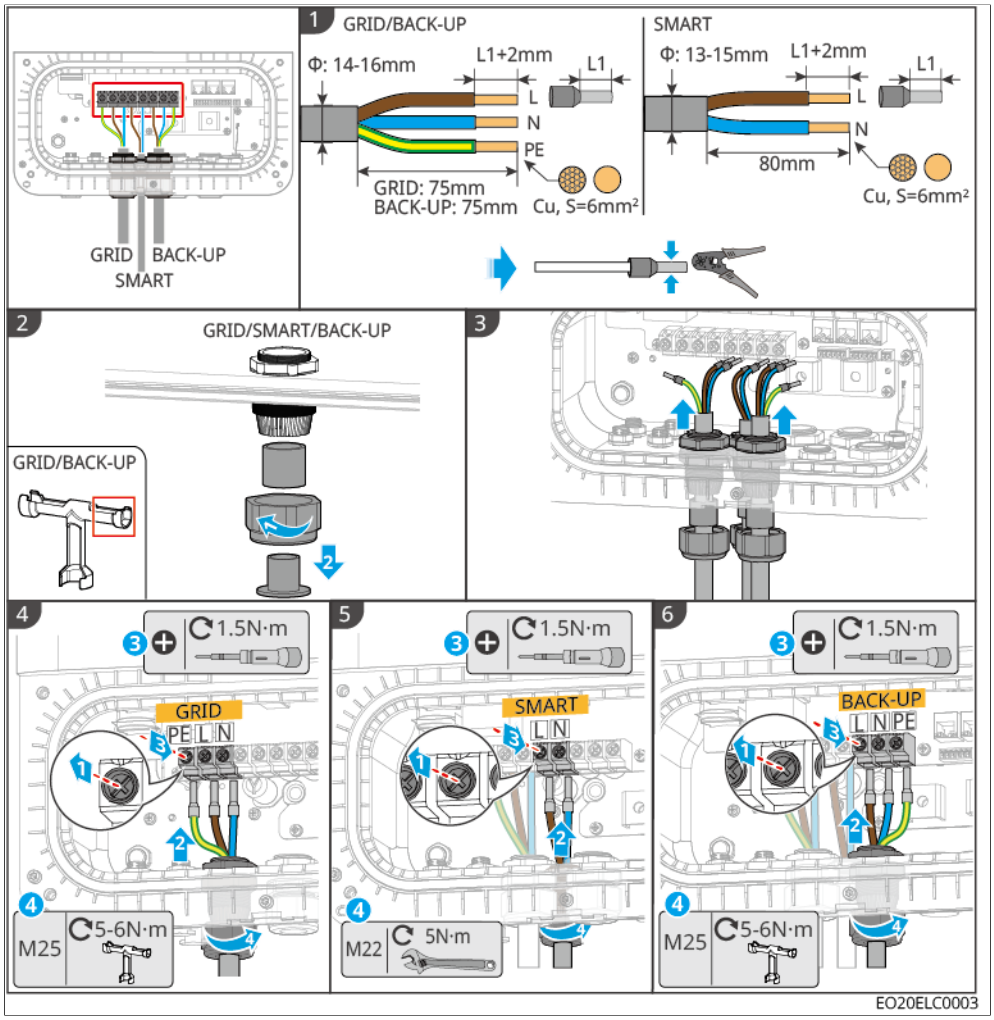

Figure46 Connecting the AC Cable

5.9 Connecting the Meter Cable

NOTICE

- Please ensure that the CT connection direction and phase sequence are correct; otherwise, it may lead to incorrect monitoring data.
- Ensure that all cable connections are correct, tight, and without looseness. Improper wiring may cause poor contact or damage to the meter.
- In areas with lightning risk, if the meter cable length exceeds 10m and the cables are not laid with grounded metal conduits, it is recommended to install external lightning protection devices.
- The outer diameter of the AC power line must be smaller than the aperture of the CT to ensure that the AC power line can pass through the CT.
- To ensure the current detection accuracy of the CT, it is recommended that the CT cable length does not exceed 30m.
- Do not use network cables as CT cables, as it may cause damage to the meter due to excessive current.
- The CTs provided by equipment manufacturers may vary slightly in size and appearance depending on the model, but the installation and wiring methods are consistent.

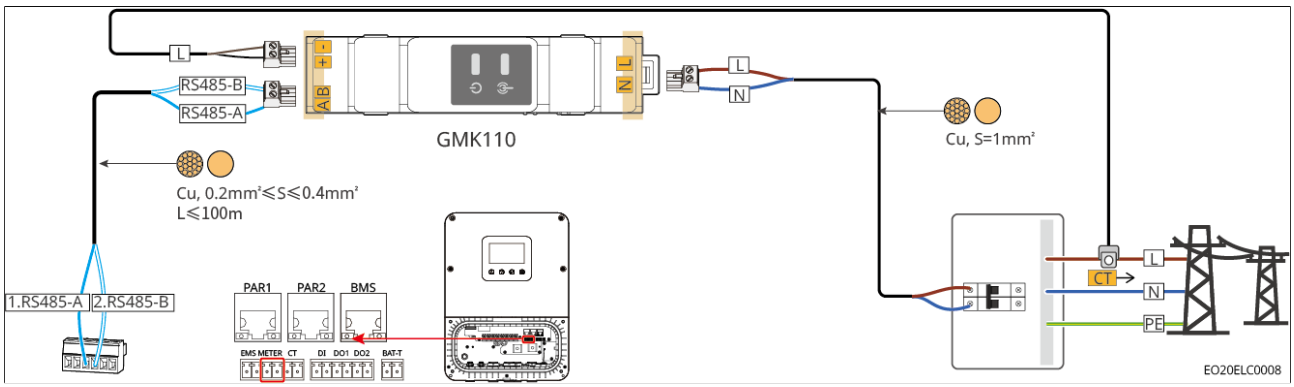

Figure47 GMK110 Meter Wiring Diagram

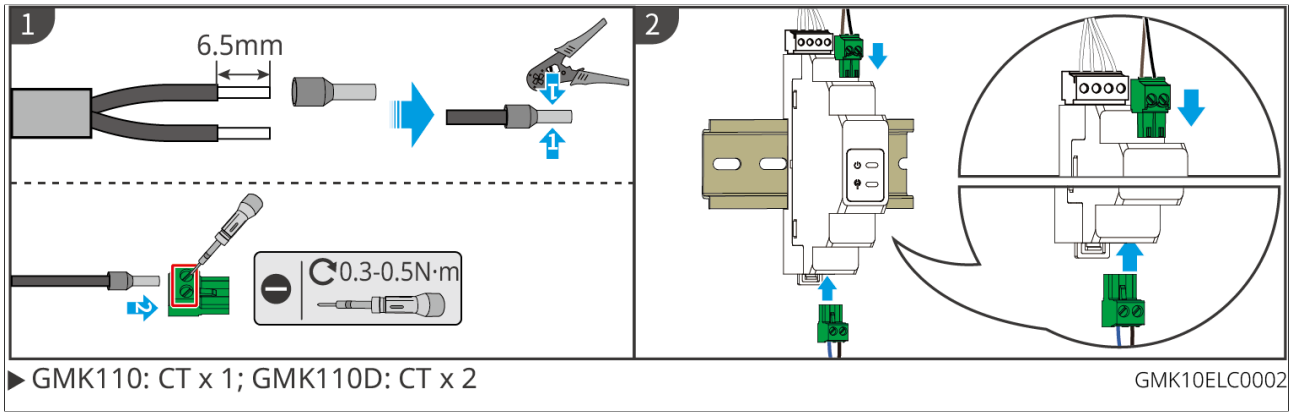

Figure48 Connecting the GMK110 Meter Cable

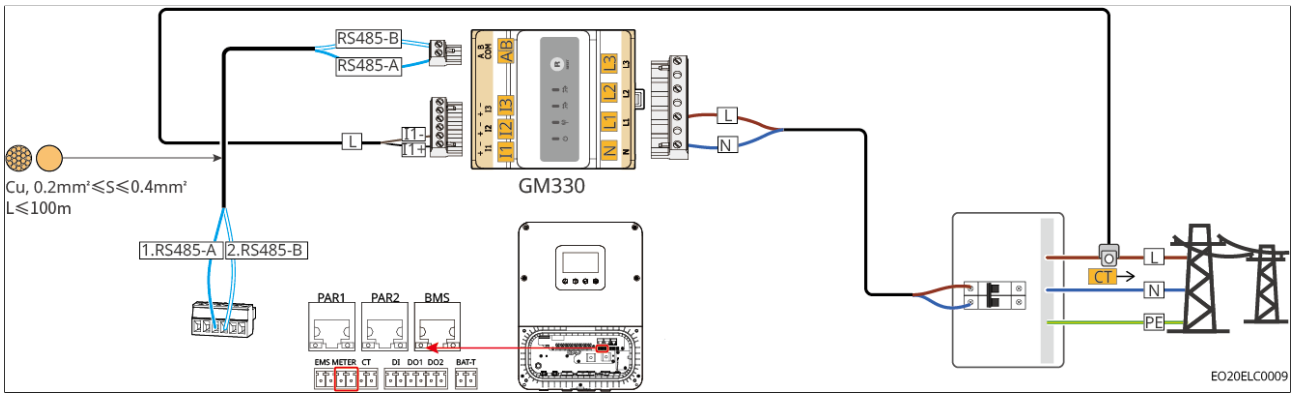

Figure49 GM330 Meter Wiring Diagram

Wiring Steps

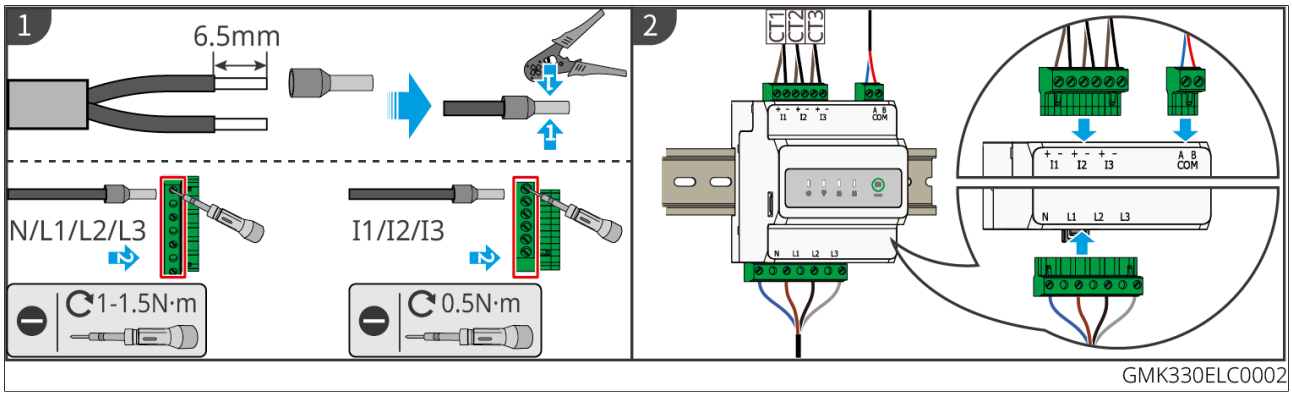

Figure50 Connecting the GM330 Meter Cable

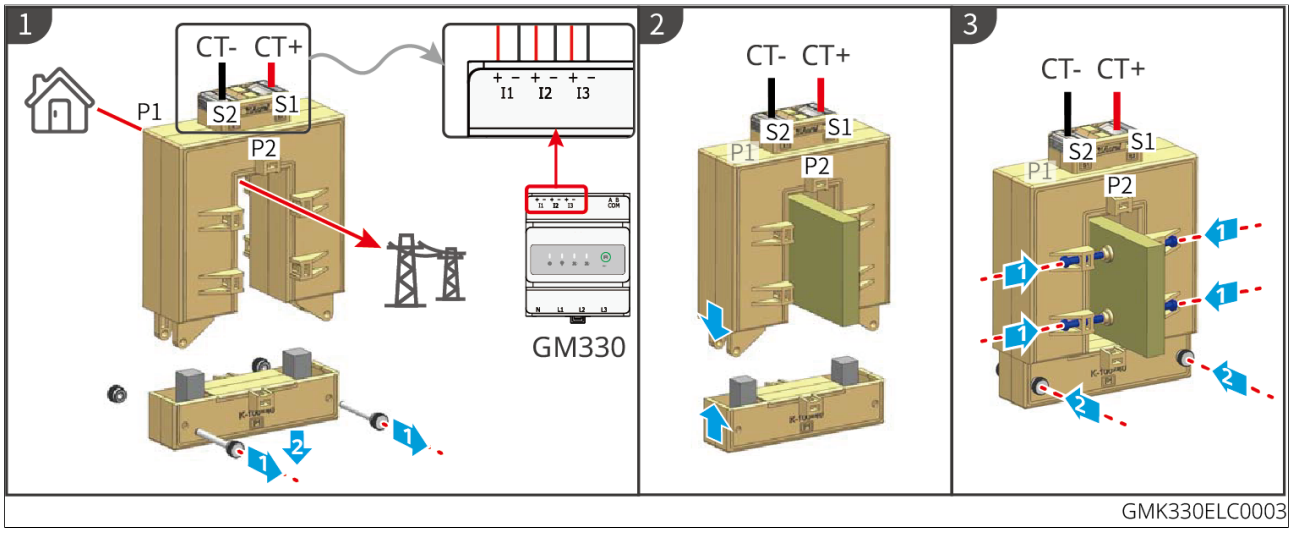

Figure51 Installing the CT (Type One)

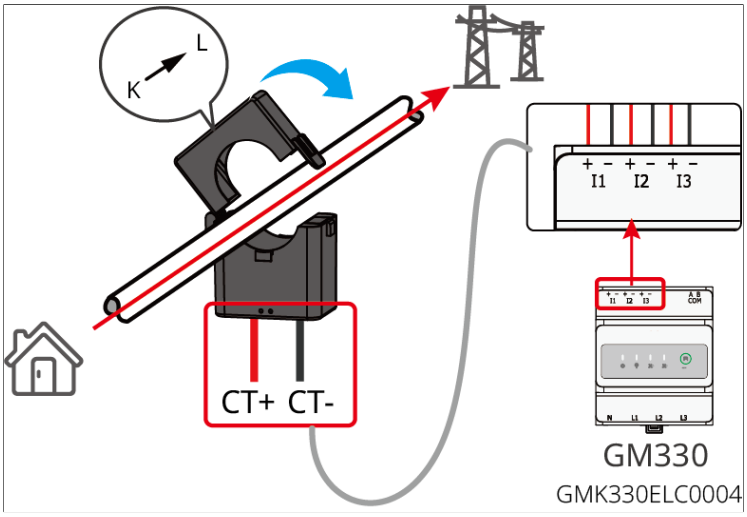

Figure52 Installing the CT (Type Two)

5.10 Connecting the Inverter Communication Cable

NOTICE

- The inverter communication function is optional. Please select according to the actual usage scenario.
- The inverter supports connecting to a mobile phone or WEB interface via Bluetooth or WiFi communication to set device-related parameters, view device operation information and error messages, and keep abreast of the system status.
- If you need to use the remote shutdown function, please enable this function in the App after wiring is completed.
- Do not enable this function in the App if the inverter is not connected to a remote shutdown device, otherwise the inverter will not be able to operate in grid-connected mode.
- For the inverter parallel communication cable, if using a CAT 5E standard shielded network cable, the recommended length is ≤5m.

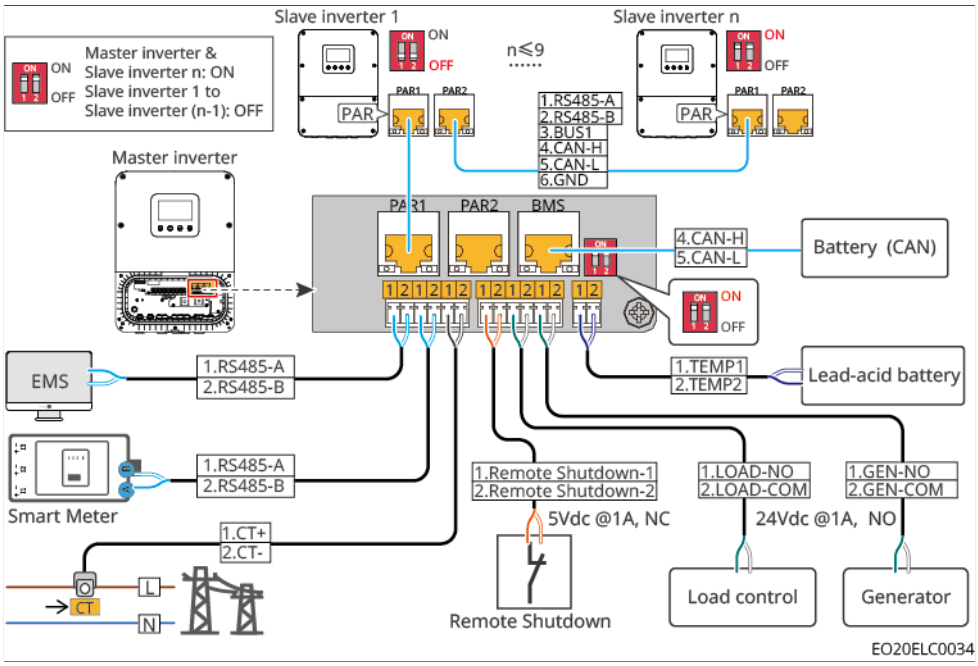

port (Silkscreen)	Function	Description
PAR1&PAR2	Parallel Communication port	Parallel communication port, used in parallel networking to connect other inverters and control the on-grid/off-grid status of each inverter.
BMS	Battery BMS Communication	When connecting to lithium-ion batteries, used to connect the battery system BMS communication cable, supporting CAN signal communication.
EMS	EMS Communication port	When used to connect third-party EMS devices, supports RS485 communication.
Meter	Meter Communication	Supports connecting to an external smart meter using RS485 communication.
CT	CT Connection port	Connect the CT communication cable.
DI	Remote Shutdown	• Remote Shutdown function: After receiving a shutdown signal from the emergency switch, the inverter's AC side automatically disconnects, stopping grid connection. • Requires an external emergency shutdown switch, controlled via the DI port: DI port closed, the unit starts; DI port open, the unit stops. • 5Vdc @1A, NC normally closed contact.

port (Silkscreen)	Function	Description
DO1	load control	• Supports connection to dry contact signals to achieve functions such as load control. DO contact rating is 24Vdc @1A, NO/COM normally open contact. • Supports SG Ready heat pump connection, controlling the heat pump via dry contact signals. • Supported operating modes: ◦ Operating Mode 2 (Signal: 0:0): Energy-saving Mode, in this mode, the heat pump operates in energy-saving mode. ◦ Operating Mode 3 (Signal: 0:1): Start Recommendation, in this mode, the heat pump increases hot water reserve to store heat while maintaining current operation.
DO2	Generator Start/Stop Control port	Supports connection to generator control signals. DO contact rating is 24Vdc @1A, NO/COM normally open contact.
BAT-T	Lead-acid Temperature Measurement port	Used to connect the temperature sensor cable for lead-acid temperature measurement; please contact your dealer for purchase if needed.

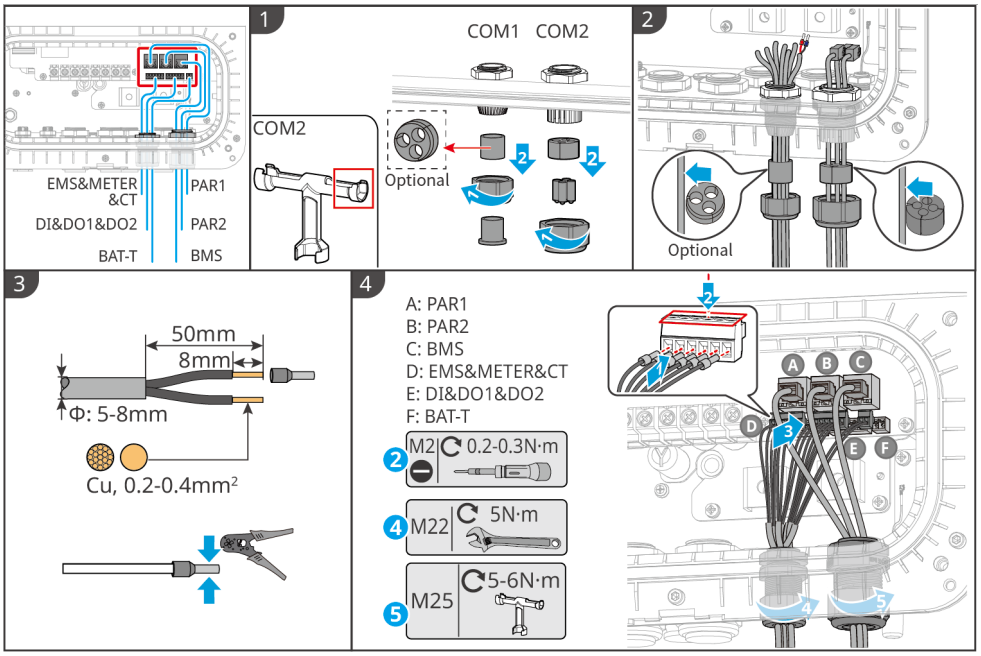

Figure53 Connecting the communication cable

5.11 Installing the Inverter Chassis Lower Cover

NOTICE

After completing the electrical wiring, it is necessary to check the correctness and tightness of the connections, thoroughly clean any debris left in the wiring cavity, and finally install and secure the lower enclosure cover plate to ensure waterproofing.

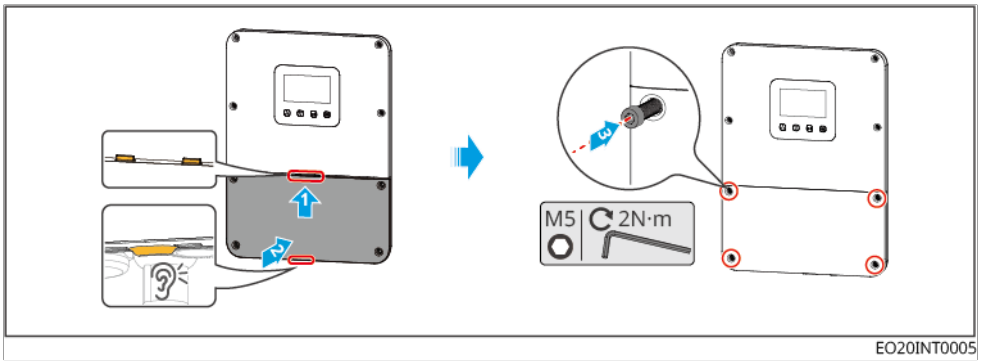

Figure54 Installing the Chassis Lower Cover

5.12 Installing the Battery Cover

5.12.1 LX A5.0-10

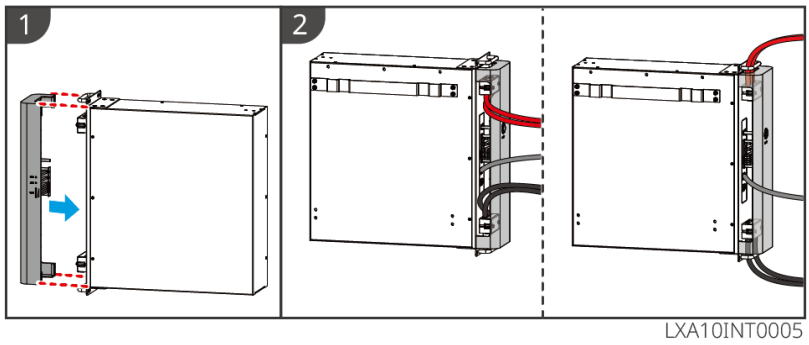

5.12.2 LX A5.0-30

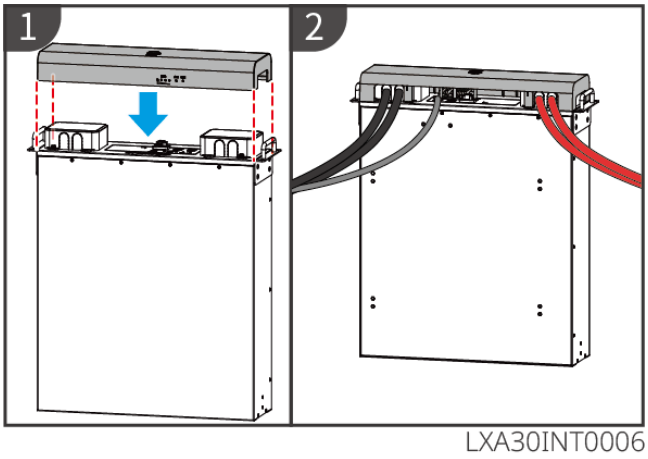

5.12.3 GW16.1-BAT-LV-G10

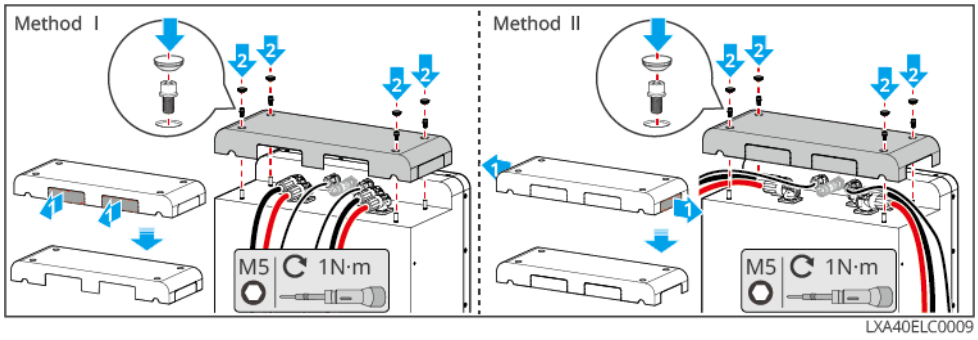

6 System Commissioning

6.1 Check Before Power ON

No.	Inspection Item
1	The equipment is securely installed. The installation location facilitates operation and maintenance, the installation space allows for ventilation and heat dissipation, and the installation environment is clean and tidy.
2	The PE cable, DC cable, AC cable, Communication cable, and terminal resistor are correctly and securely connected.
3	Cable bundling meets cabling requirements, is reasonably distributed, and shows no damage.
4	For unused cable entry holes and ports, ensure they are reliably connected using the terminal blocks provided with the accessories and have been sealed.
5	Ensure that used cable entry holes have been sealed.
6	The voltage and frequency at the inverter grid connection point meet the grid connection requirements.

6.2 Power ON

⚠WARNING

- Battery black start usage scenarios:
  - Requires activating the inverter via the battery.
  - Necessitates battery charge/discharge management without an inverter, etc.
- After the battery system starts, please ensure normal communication between the inverter and the battery system within 15 minutes. If communication fails, the battery system switch will automatically disconnect, powering off the battery system.
- When multiple battery units are connected in parallel clusters within the system, starting any one battery unit will start all batteries.

Power ON Procedure

1. Close the switch between the inverter and the battery. (Select according to local regulations.)
2. Start the battery system.
   a. LX A5.0-10, LX A5.0-30: Briefly press the battery system switch for ≤ 2s.
   b. GW16.1-BAT-LV-G10: Close the battery system integrated circuit breaker, then briefly press the battery system button.
3. Close the circuit breaker between the PV modules and the inverter.
4. Close the grid-side circuit breaker.
5. Close the BACK-UP circuit breaker.
6. Close the generator/smart load switch.

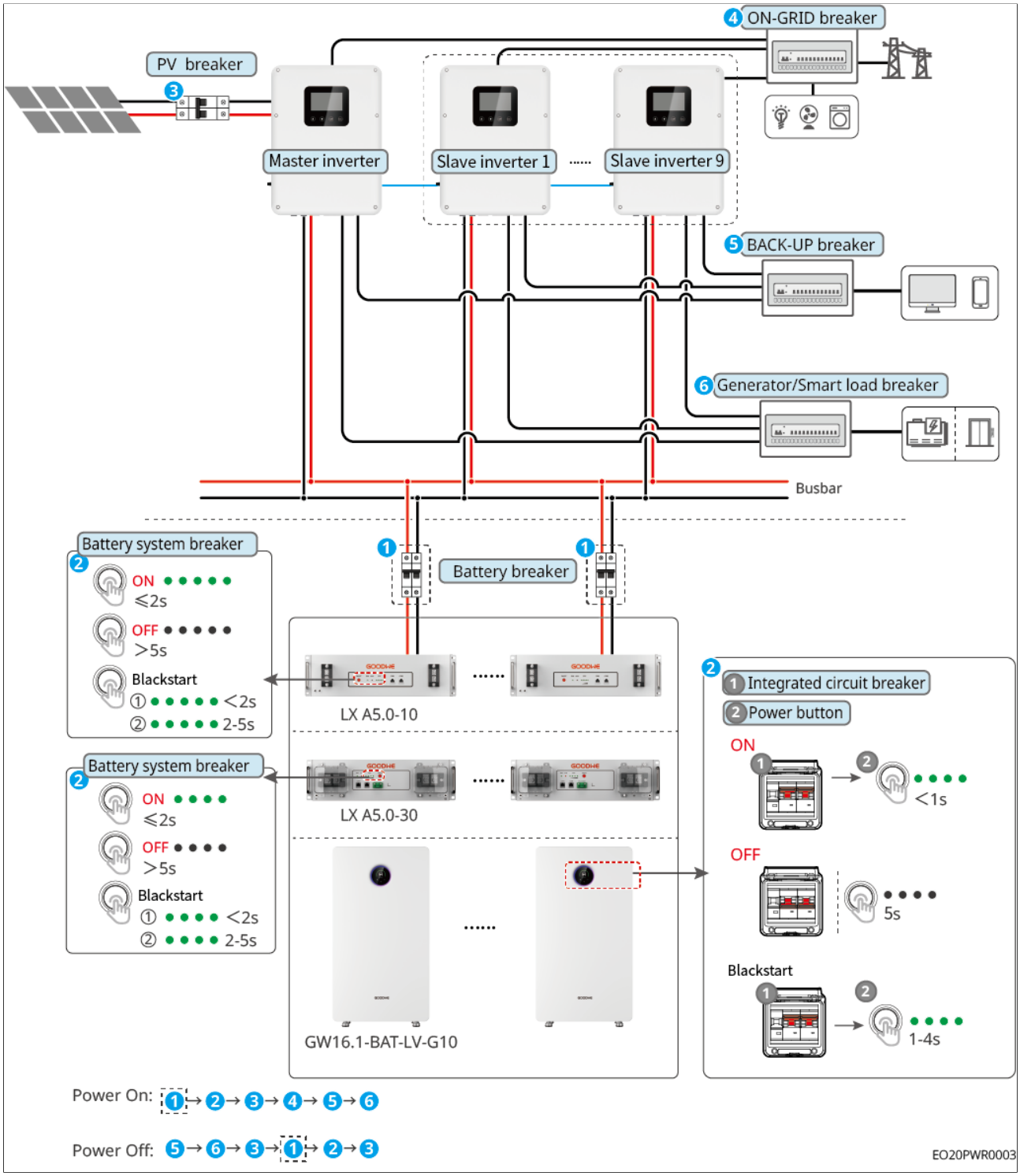

6.3 Indicators

6.3.1 Battery Indicators

6.3.1.1 LX A5.0-10

Normal State

SOC Indicator Light SOC1 SOC2 SOC3 SOC4 SOC5	RUN Light	Battery System Status
The SOC indicator light shows the battery system's power level. ○○○○○ SOC<5% ●○○○○ 5%≤SOC<25% ●●○○○ 25%≤SOC<50% ●●●○○ 50%≤SOC<75% ●●●●○ 75%≤SOC<95% ●●●●● 95%≤SOC≤100%	Green blinking once per second	Battery system is in standby mode
	Green blinking twice per second	Battery system is idle
	Solid green	Battery system is charging
Highest SOC indicator light blinks once per second • When 5% ≤ SOC < 25%, SOC1 blinks • When 25% ≤ SOC < 50%, SOC2 blinks • When 50% ≤ SOC < 75%, SOC3 blinks • When 75% ≤ SOC < 95%, SOC4 blinks • When 95% ≤ SOC ≤ 100%, SOC5 blinks	Solid green	Battery system is discharging

Abnormal State

ALM Indicator ●	Battery System Status	Description
Red blinking at 1/s	Battery system alarm triggered	After an alarm is triggered, the battery system will perform a self-test. Wait for the self-test to complete, after which the system will enter normal operation or fault status.
Red solid on	Battery system fault occurred	Determine the fault type based on the display pattern of the SOC indicator light, and handle it according to the methods recommended in the fault handling section.

6.3.1.2 LX A5.0-30

Indicator		System Status
○○○○	No green light on SOC indicator	SOC=0%
●○○○	The first SOC indicator shows green	0% < SOC≤25%
●●○○	The second SOC indicator shows green	25% < SOC≤50%
●●●○	The third SOC indicator shows green	50% < SOC≤75%
●●●●	The fourth SOC indicator shows green	75% < SOC≤100%
● RUN Light	Solid green	Battery system operating normally
	Green blinking once per second	Battery system in standby state
	Green blinking three times per second	PCS Comm Loss
	Slow blinking	After an alarm occurs in the battery system, it will perform a self-check. Wait for the self-check to complete, then transition to normal operation or fault state.

Indicator		System Status
ALM Light	Solid red	Determine the type of fault that occurred based on the display pattern of the SOC indicator, and handle it according to the methods recommended in the fault handling section.

6.3.1.3 GW16.1-BAT-LV-G10

Normal State

Indicator Name	Indicator State		Corresponding Other Light States	System Status
SOC Indicator		SOC indicator solid green	/	SOC=0% 0% < SOC≤25% 25% < SOC≤50% 50% < SOC≤75% 75% < SOC≤100%

Indicator Name	Indicator State		Corresponding Other Light States	System Status
	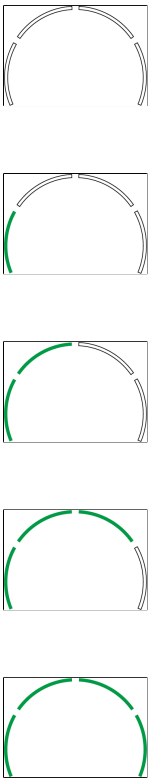	SOC indicator blinking green		Battery system is in discharge state
Operation Indicator + Touch Button		Solid white	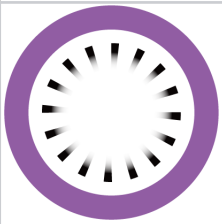 Blue-purple breathing light	System operating normally
		Blinking white	Blue-purple chasing light	System preparing

Indicator Name	Indicator State		Corresponding Other Light States	System Status
Communication Light		Solid white	/	PCS communication normal

Abnormal State

Indicator Name	Indicator Status		Corresponding Other Indicator Status	System Status
SOC Indicator		SOC indicator green steady on	red flashing off red steady on	Determine the fault type that has occurred based on the SOC indicator display pattern, and handle it according to the methods recommended in the fault handling chapter.
Comm Indicator		off	/	PCS Comm Loss
System Alarm Indicator		white steady on	/	System alarm and undervoltage fault levels 2, 3, 4

6.3.2 Smart Meter Indicator GMK110

Type	Status	Description
Power Indicator	Steady On	The meter is powered on
	Off	The meter is powered off
Communication Indicator	Flashing	The meter is communicating normally
	Off	The meter has a communication fault or is not communicating

7 System Debugging and Power Station Monitoring

7.1 Device Commissioning and Power Plant Monitoring via SEMS+ App

SEMS+ App is a software used for remote power plant monitoring or local device commissioning. It supports installers or owners to:

- Remotely monitor the power plant operation status and configure the power plant and device operating parameters.
- Locally connect to devices to check their operation status and configure device parameters.

Downloading and Installing the SEMS+ App

Mobile Phone Requirements:

- Operating System Requirements: Android 7.0 and above, iOS 15.1 and above.
- The phone supports a web browser and can connect to the Internet.
- The phone supports WLAN/Bluetooth functionality.

Download Methods:

Method 1:

Search for "SEMS+" in Google Play, App Store, Huawei, Honor, Xiaomi, OPPO, or vivo app stores to download and install.

SEMS0163

Method 2:

Scan the QR code below to download and install.

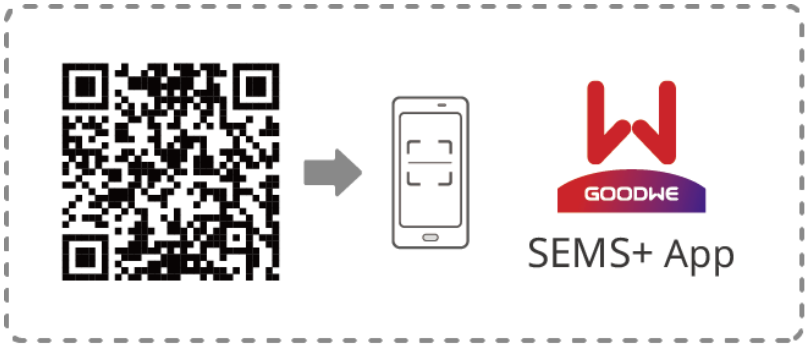

SEMS0164

For detailed functions, please refer to the "SEMS+ App User Manual". The user manual can be obtained from the official website or by scanning the QR code below.

7.2 Device Debugging and Power Plant Monitoring via SEMS+ WEB

SEMS+ WEB is a monitoring platform that communicates via WiFi or LAN. The following are common functions of SEMS+ WEB:

1. Manage organization or user information, etc.
2. Add and monitor power plant information, etc.
3. Maintain equipment.

For detailed functions, please refer to the SEMS+ WEB User Manual.

《SEMS+ WEB User Manual》

7.3 Device Debugging via LCD

7.3.1 LCD Overview

Via the LCD screen, users can:

1. View device operation data, software version, alarm information, etc.
2. Set parameters, safety regulation regions, etc.

LCD Interface Overview

The LCD supports both touch operation and button operation.

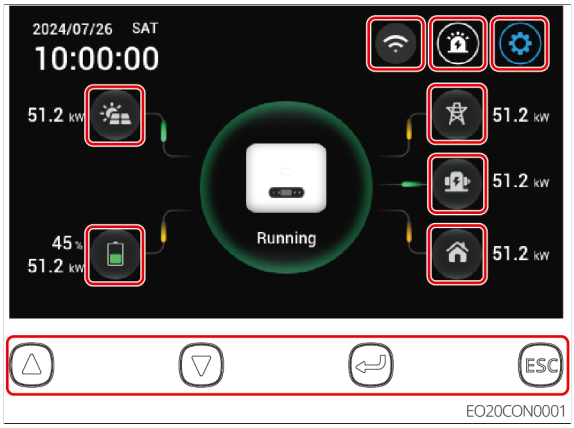

Figure55 Main Screen

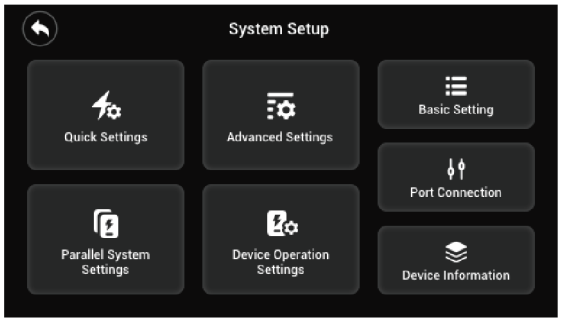

EO20CON0002

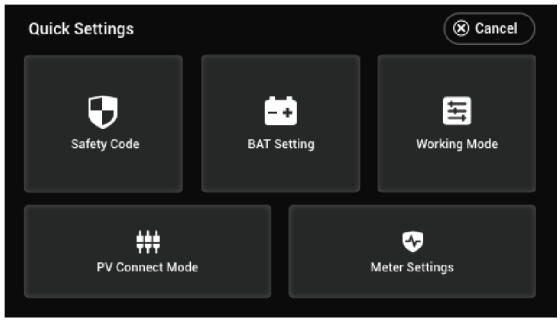

EO20CON0003

Name/Icon	Description
△	Up
▽	Down
↵	Confirm
ESC	• Short press: Exit the page • ESC and △: Press and hold both for 5s to restart the device
	Used to view PV current, voltage, power generation, and other information
	Used to view battery model, status, and other information
	Used to view inverter alerts and fault information
	Press and hold for 3s to enter the inverter's settings interface
	Used to view grid status information
	Used to view generator status
	Used to view inverter load information
	Return to the main interface

Name/Icon	Description
Cancel	Return to the previous menu
Next	Enter the next settings page
Back	Return to the previous settings page

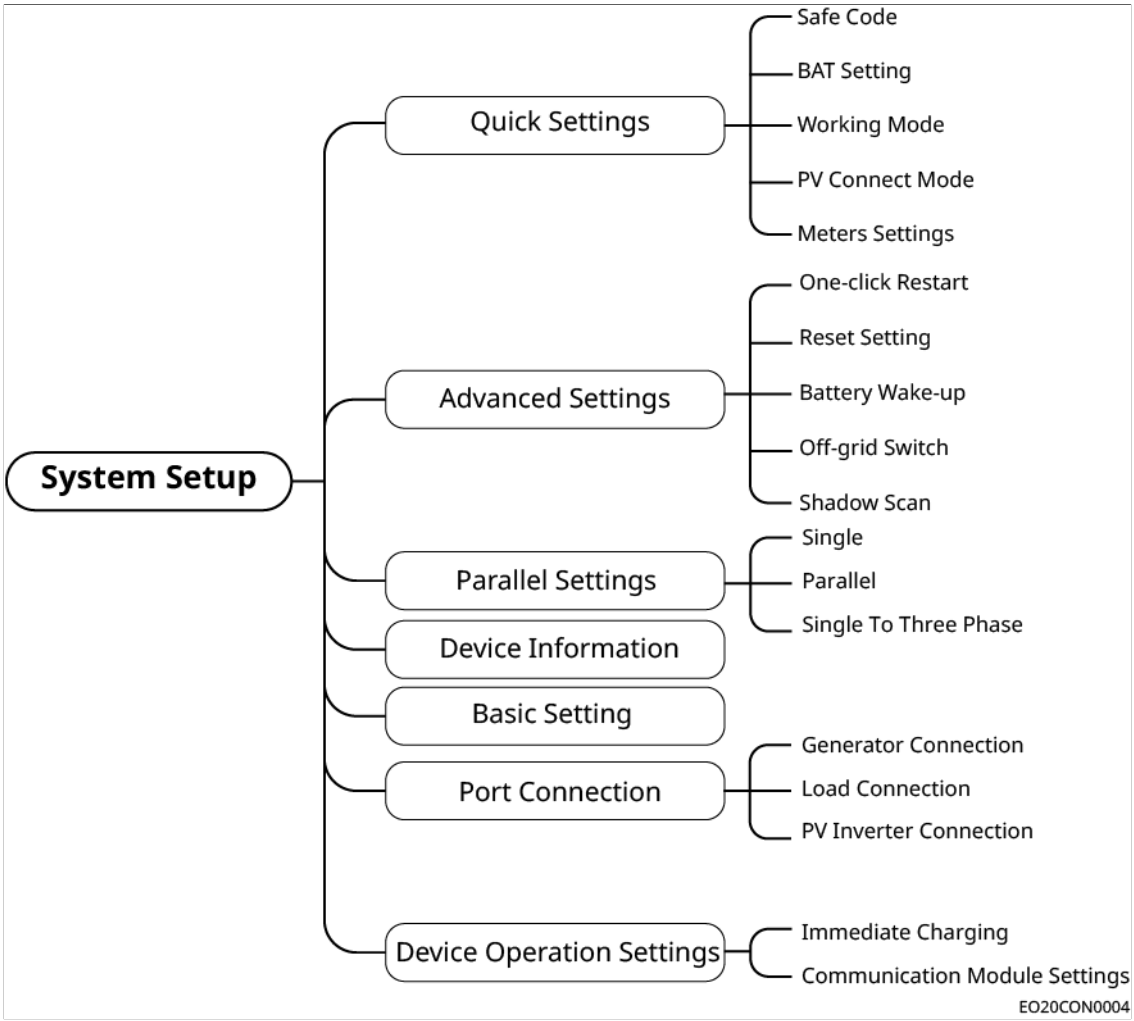

Figure56 LCD Settings Interface Structure

7.3.2 Parallel System Settings

NOTICE

- Parallel operation and single-phase to three-phase system configuration must be performed before other parameter settings; otherwise, the system cannot operate normally.
- Parallel Operation System:
  - Please set the parallel operation mode and the number of units in parallel via the LCD screen of the master inverter connected to the CT or meter.
  - In a parallel system, relevant parameters can be set through the master inverter, and the configuration will be automatically synchronized and distributed to the slave inverters.
  - When batteries are connected to inverters in a non-busbar mode, if the battery models connected to each inverter are different, the corresponding battery model can be set separately for each inverter via the App.
- Single-Phase to Three-Phase System: Select the LCD screen of the master inverter connected to load control, generator control, or remote shutdown communication to configure the single-phase to three-phase system.

1. From the main interface, click ⚙ > Parallel System Settings to enter the parameter settings screen.
2. The inverter adapts as master or slave based on the connected meter and CT conditions.
3. After completing the settings, click Confirm. The parameters are successfully set once the interface prompts 'Confirm OK'.

NOTICE

Please ensure to click Confirm on each page for the parameters to take effect; otherwise, the system will run with default parameters.

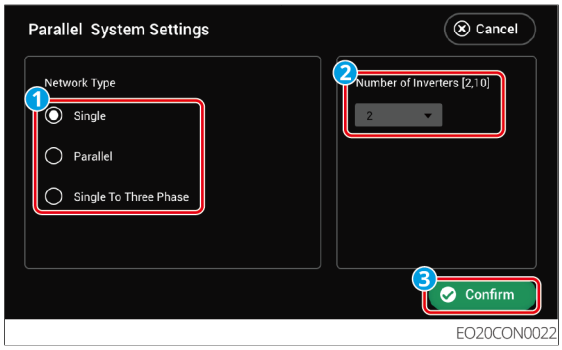

Parameter Name	Description
Single	Standalone scenario
Parallel	Parallel system; when in parallel system, need to select the number of parallel inverters.
Single To Three Phase	Single-phase to three-phase scenario

7.3.3 Quick Settings

Set Safety Code

1. From the main interface, click ⚙ > Quick Settings > Safe Code to enter the parameter setting interface.
2. Please select the corresponding safety code according to the country or region where the device is located.
3. After completing the settings, click Confirm. The parameter setting is successful when the interface prompts Confirm OK.

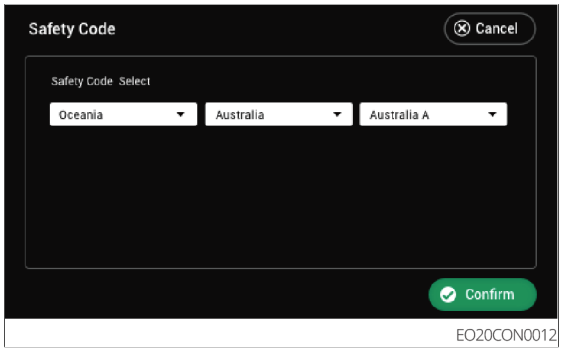

Figure57 Set Safety Code

Set Battery Parameters

1. From the main interface, click ⚙ > Quick Settings > BAT Setting to enter the parameter setting interface.
2. Please set the parameters according to the actual situation.
3. After completing the settings, click Confirm. The parameter setting is successful when the interface prompts Confirm OK.

NOTICE

Please ensure that on each page, you must click Confirm to ensure the parameters take effect; otherwise, the system will run with default parameters.

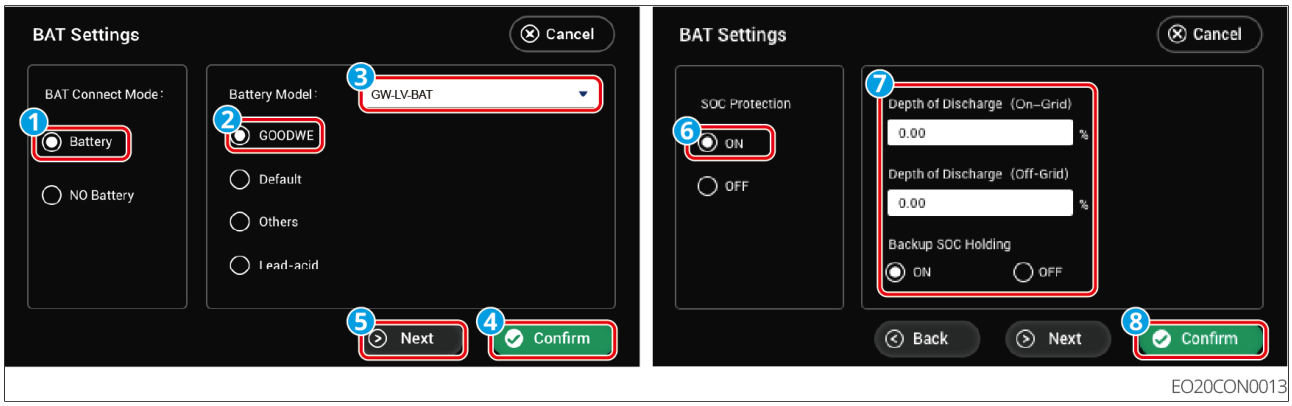

Figure58 Set Lithium Battery Parameters

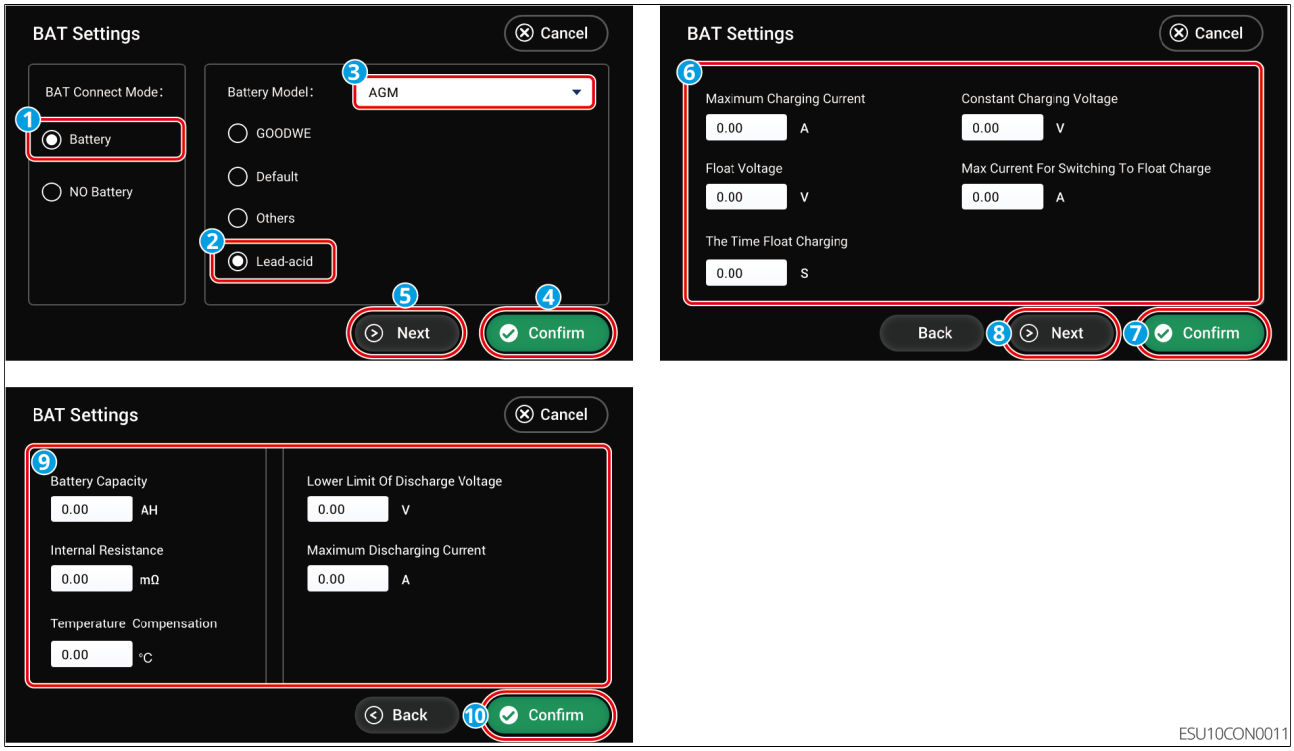

Figure59 Set Lead-Acid Battery Parameters

Basic Parameter Settings

BAT Connection Mode	Type	Description
Battery	GOODWE	If the system is connected to a GOODWE brand lithium battery, select GOODWE and choose the correct model.
	Default	If the third-party lithium battery model connected to the system is not in this list, please select based on the actual situation: • Lithium 50Ah • Lithium 100Ah
	Others	If the third-party lithium battery model connected to the system is in this list, please select the correct model based on the actual situation.
	Lead acid	If the system is connected to a lead-acid battery, select Lead acid and choose the correct lead-acid type. Currently supported types are GEL, AGM, Flooded.
NO Battery	No battery is connected to the system.	
BAT Setting	Configure according to the actual battery connected in the system.	

Lithium Battery Parameter Settings

Parameter Name	Description
SOC Protection	Enable or disable the SOC protection function.
Depth Of Discharge (On-Grid)	The maximum discharge depth protection point for the battery when the inverter operates in on-grid mode.
Depth Of Discharge (Off-Grid)	The maximum discharge depth protection point for the battery when the inverter operates in off-grid mode.
Backup SOC Holding	To ensure sufficient battery SOC to maintain normal system operation during off-grid periods, the battery will be charged via the grid or PV to the set SOC protection value when the system is operating in on-grid mode.

Lead-Acid Battery Parameter Settings

Parameter Name	Description
Maximum Charging Current	Battery charging defaults to constant charging mode; Set the maximum charging voltage and maximum charging current for this mode; configure according to the battery technical parameters.
Constant Charging Voltage	
Float Voltage	When the battery charging current is less than the Maximum Current For Switch To Float Charge and this condition lasts for the duration of The Time Float Charging, the battery charging state switches from constant charging mode to float charging mode. Float Voltage is the maximum battery charging voltage in float charging mode. Configure according to the battery technical parameters.
The Time Float Charging	
Maximum Current For Switch To Float Charge	
Battery Capacity	Set the battery capacity according to the parameters of the actually connected battery.
Internal Resistance	The internal resistance present in the battery. Configure according to the battery technical parameters.
Temperature Compensation	By default, when the temperature exceeds 25°C, for every 1°C increase, the upper limit of the charging voltage decreases by 3mV. Configure according to the actual battery technical parameters.
Lower Limit Of Discharge Voltage	Configure according to the battery technical parameters.
Maximum Discharging Current	Configure according to the battery technical parameters. A higher discharge current results in shorter battery operating time.

Set Working Mode

1. From the main interface, click ⚙ > Quick Settings > Working Mode to enter the parameter setting interface.
2. Please set the parameters according to the actual situation.
3. After completing the settings, click Confirm. The parameter setting is successful when the interface prompts Confirm OK.

NOTICE
Please ensure to click Confirm on each page for the parameters to take effect; otherwise, the system will run with default parameters.

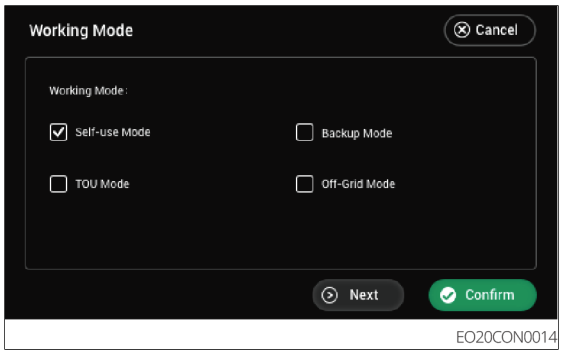

Figure60 Set Working Mode

Parameter Name		Description
Self-use Mode		When the working mode is set to Self-use Mode, the Back-up Mode, TOU Mode, and Off-Grid Mode can be enabled simultaneously. Please select according to the actual situation. Working mode priority: Off-Grid Mode > Back-up Mode > TOU Mode > Self-use Mode.
Back-up Mode	Charging From Grid	Enable this function to allow the system to purchase electricity from the grid.
	Rated Power	The percentage of the power when purchasing electricity relative to the inverter's rated power.
TOU Mode	Time	Within the start and end time, the battery charges or discharges according to the set charge/discharge mode and rated power.
	Charge/Discharge	Set to charge or discharge according to actual requirements.
	Power (%)	The percentage of the power during charging or discharging relative to the inverter's rated power.

Parameter Name		Description
	Bat (%)	Charging stops after the battery reaches the set SOC. To set the stop SOC for battery discharge, please refer to the section 9.2.2.2 Setting Battery Parameters and configure Depth of Discharge (On-Grid) and Depth of Discharge (Off-Grid) via the LCD screen.
Off-Grid Mode		Do not run the pure off-grid mode when the inverter is not connected to a battery system.

Set PV Connection Mode

1. From the main interface, click ⚙ > Quick Settings > PV Connect Mode to enter the parameter setting interface.
2. Please set the parameters according to the actual situation.
3. After completing the settings, click Confirm. The parameter setting is successful when the interface prompts Confirm OK.

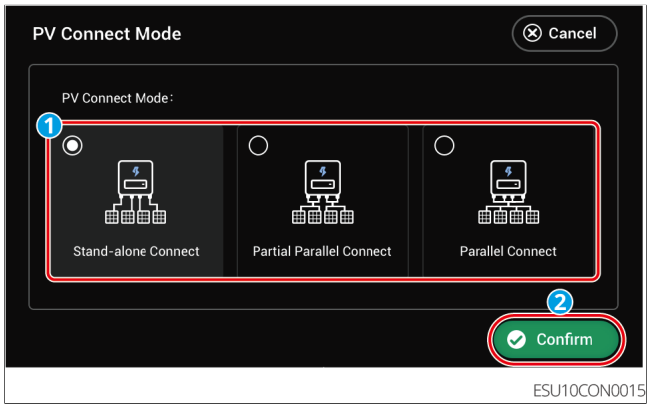

Figure61 Set PV Connection Mode

Parameter Name	Description
Stand-alone Connect	Each PV string is connected one-to-one to an MPPT port on the inverter side.
Partial Parallel Connect	When one PV string is connected to multiple MPPT ports on the inverter side, other PV components are simultaneously connected to other MPPT ports on the inverter side.

Parameter Name	Description
Parallel Connect	When external PV strings are connected to the PV input ports on the inverter side, one PV string is connected to multiple PV input ports.

Meter Settings

1. From the main interface, click ⚙ > Quick Settings > Meter Settings to enter the parameter setting interface.
2. Click Start Test to begin detection. After the detection is complete, judge the result according to the interface prompts.

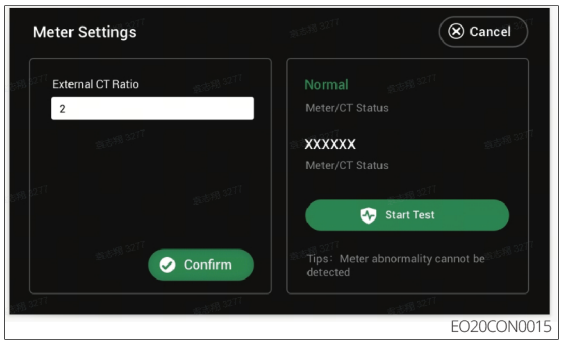

Figure62 Meter Settings

7.3.4 Setting Advanced Parameters

1. From the main interface, click ⚙ > Advanced Settings to enter the parameter setting interface. Enter the default password: 1111.
2. Set the parameters according to the actual requirements.
3. After completing the settings, click Confirm. The parameters are successfully set once the interface prompts "Confirm OK".

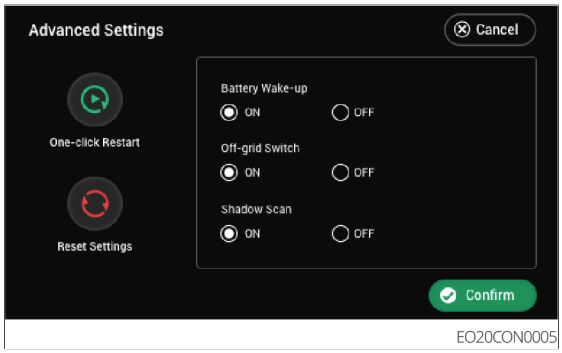

Figure63 Setting Advanced Parameters

Parameter Name	Description
One-click Restart	Using this function, the inverter can be restarted quickly.
Reset Settings	Inverter factory reset.
Battery Wake-up	When enabled, the battery can be woken up after it shuts down due to under-voltage protection. If there is a circuit breaker between the lithium battery and the inverter, ensure the circuit breaker is closed. After enabling, the output voltage at the battery port is around 60V.
Off-grid Switch	In off-grid mode, the off-grid control switch controls the enabling and disabling of the inverter's off-grid function. This function is not effective in grid-tied mode. The switch is initially in the ON state, enabling the off-grid function. After the inverter is powered on, the off-grid output function is activated. In the off-grid state, turning the off-grid switch off and then on can clear the off-grid overload time and restart the off-grid output.
Shadow Scan	When photovoltaic panels are severely shaded, enabling the shadow scan function can optimize the inverter's power generation efficiency.

7.3.5 Setting Immediate Charging

1. From the main interface, click ⚙ >Device Operation Settings> Immediate Charging to enter the parameter setting interface.
2. Please set the parameters according to actual requirements.
3. After completing the settings, click Confirm. The parameter setting is successful

when the interface prompts Confirm OK.

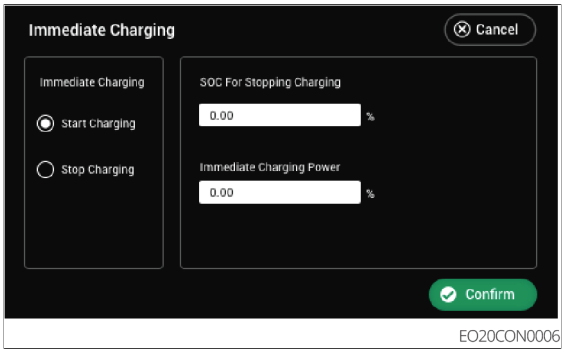

Figure64 Immediate Charging

Parameter Name	Description
Immediate Charging	When enabled, the battery is charged immediately from the grid. Takes effect only once. Enable or stop as needed.
SOC For Stopping Charging	When Immediate Charging is enabled, charging will stop once the battery SOC reaches the charging cutoff SOC.
Immediate Charging Power	The charging power as a percentage of the inverter's rated power when Immediate Charging is enabled. For example, for an inverter with a rated power of 10kW, setting this to 60 results in a charging power of 6kW.

7.3.6 Setting the Basic Information

1. From the main interface, click ⚙ > Basic Settings to enter the parameter settings interface.
2. Please set the parameters according to the actual situation.
3. After completing the settings, click Confirm. The parameters are successfully set after the interface prompts Confirm OK.

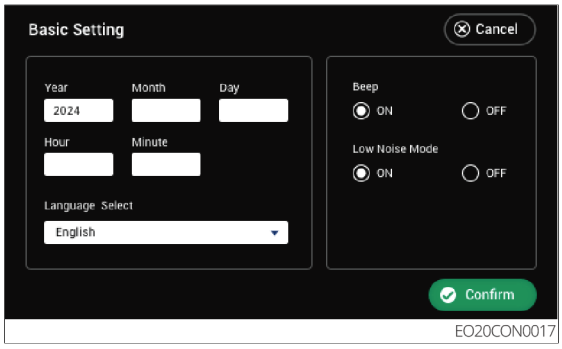

Figure65 Setting the Basic Information

Parameter Name	Description
Year/Month/Day/Hour/Minute	Set the system time.
Language Select	Set the screen language.
Beep	After enabling the beeper, the beeper sounds when the inverter has a serious fault.
Low Noise Mode	Conditions and effects of enabling low noise mode: • Prerequisite: Must be connected to a stable and reliable grid, otherwise this mode will not take effect. • NOTICE: If the load is too high, the system may automatically purchase electricity from the grid to make up the difference, leading to increased electricity costs. • Effect: During the enabling of this mode, photovoltaic power generation may have some losses.

7.3.7 Setting Port Connection

Setting Port Connection for Diesel Generator

1. From the main interface, click ⚙ > Port Connection to enter the parameter setting

interface.

2. Please set the parameters according to the actual situation.
3. After completing the settings, click Confirm. The parameter setting is successful when the interface prompts "Confirm OK".

NOTICE
Please ensure you click Confirm on each page to make the parameters take effect; otherwise, the system will run with default parameters.

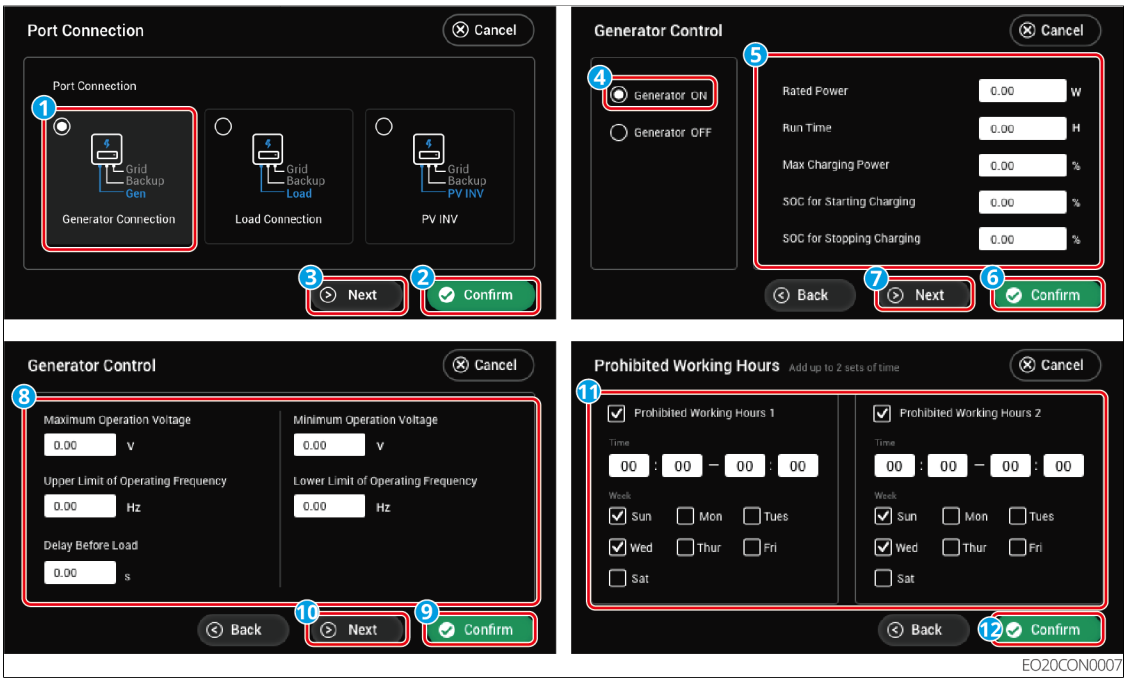

Figure66 Diesel Generator Control

No.	Parameter Name	Description
1	Generator ON/OFF	Controls the generator's start and stop. Applies only to generators supporting dry contact.
2	Rated Power	The rated power of the generator.
3	Run Time	The continuous operation time of the generator. The generator will automatically shut down after exceeding the set run time. This function only takes effect for generators supporting dry contact connection.

No.	Parameter Name	Description
4	Max Charging Power	Sets the maximum charging power for the generator to charge the battery.
5	SOC for Starting Charging	Sets the start charging SOC for the generator to charge the battery. When the battery SOC is lower than the set value, the generator will charge the battery.
6	SOC for Stopping Charging	Sets the SOC for the generator to stop charging the battery. When the battery SOC reaches the set value, the generator will stop charging the battery.
7	Maximum Operation Voltage	Sets the upper limit of the generator's operating voltage.
8	Minimum Operation Voltage	Sets the lower limit of the generator's operating voltage.
9	Upper Limit Of Operating Frequency	Sets the upper limit of the generator's operating frequency.
10	Lower Limit Of Operating Frequency	Sets the lower limit of the generator's operating frequency.
11	Delay Before Load	The no-load warm-up time for the generator before applying load.
12	Prohibited Working Hours	Please set the generator's prohibited working hours according to actual requirements.

Setting Port Connection for Load Control

1. From the main interface, click ⚙ > Port Connection to enter the parameter setting interface.
2. Please set the parameters according to the actual situation.
3. After completing the settings, click Confirm. The parameter setting is successful when the interface prompts "Confirm OK".

NOTICE
Please ensure to click Confirm on each page to make the parameters take effect; otherwise, the system will run with the default parameters.

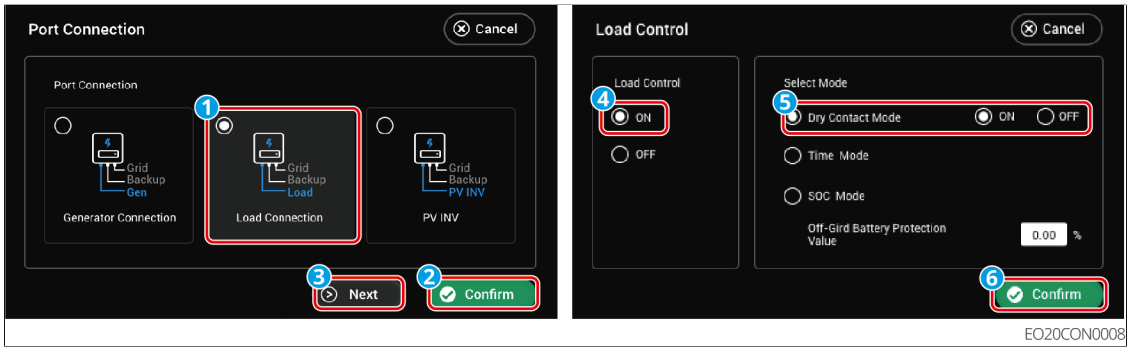

Figure67 Dry Node Mode

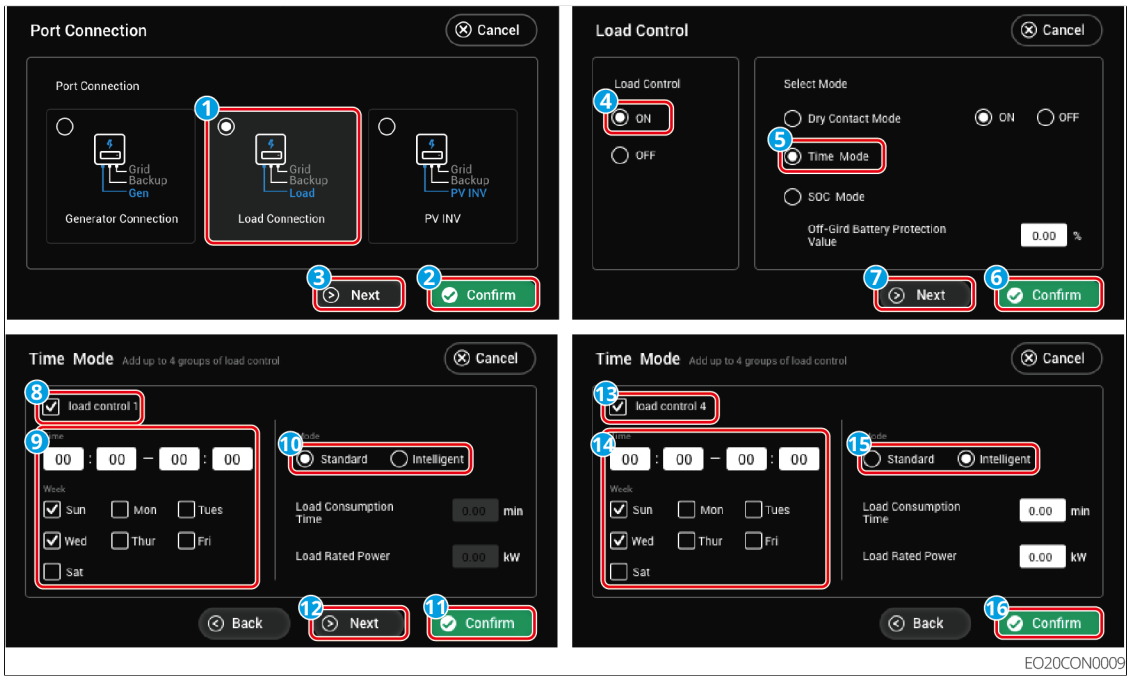

Figure68 Time Mode

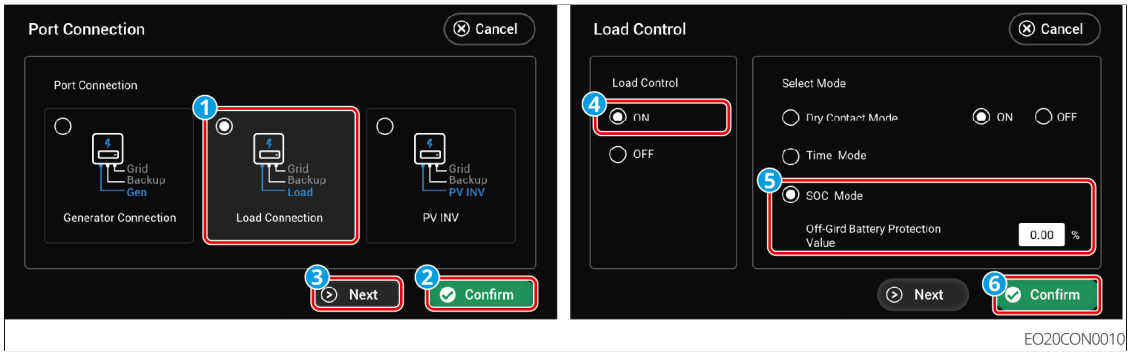

Figure69 SOC Mode

No.	Parameter Name	Description
1	Load Control ON/OFF	Set the load control function ON/OFF
2	Dry Contact Mode	ON: When the switch status is selected as ON, start supplying power to the load. OFF: When the switch status is set to OFF, stop supplying power to the load.
3	Time Mode	Within the set time period, the load will automatically be powered on or off. You can choose Standard Mode or Smart Mode.
4	Load Control 1	Set the control time for the first load group. Up to 4 groups can be set.
5	Mode: Standard/Intelligent	Standard Mode: Will supply power to the load within the set time period. Smart Mode: Within the set time period, starts supplying power to the load when the surplus energy generated by photovoltaics exceeds the preset load rated power.
6	Load Consumption Time	The minimum runtime for the load after it is turned on, to avoid frequent switching due to energy fluctuations. Only applicable in Smart Mode.
7	Load Rated Power	When the surplus energy generated by photovoltaics exceeds this load rated power, start supplying power to the load. Only applicable in Smart Mode.

No.	Parameter Name	Description
8	SOC Mode	The inverter's built-in relay dry contact control port can control whether to supply power to the load through the relay.
9	Off-Grid Battery Protection Value	In off-grid mode, if the BACK-UP terminal overload is detected or the battery SOC value is lower than the off-grid battery protection setting, the power supply to the load connected to the relay port can be stopped. Please set the off-grid battery protection value according to actual needs.

7.3.8 Communication Settings

The inverter has built-in Bluetooth and WiFi signals. You can restart the communication signal, reset the communication configuration, and enable the Bluetooth signal.

1. From the main interface, click ⚙ > Quick Settings > Communication Module Settings to enter the parameter setting interface.
2. Please set the parameters according to the actual situation.
3. After completing the settings, click Yes as prompted. The parameter setting is successful when the interface displays Confirm OK.

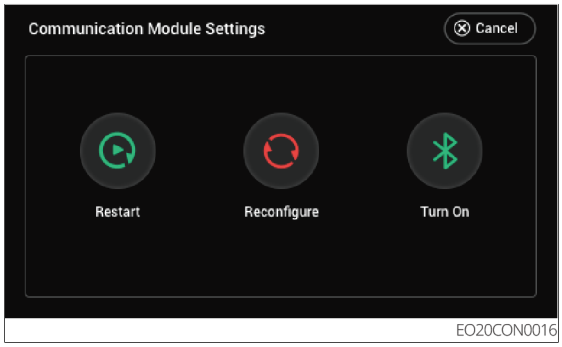

Figure70 Communication Settings

No.	Parameter Name	Description
1	Restart	Restart the wireless signal.

No.	Parameter Name	Description
2	Reconfigure	Restore communication factory settings. To continue using the device, you need to reconfigure the WiFi connection information.
3	Turn On	Turn on the Bluetooth signal. The Bluetooth signal is turned on by default from the factory. After connecting to the APP, please follow the prompts to choose whether to keep it on. If you choose no, you need to turn it on again next time you connect the Bluetooth signal.

7.3.9 Viewing Device Information

1. From the main interface, click ⚙ > Device Information to access the parameter query interface.

NOTICE
Can query the inverter serial number, DSP version, BMS version, LCD version, and ARM version.

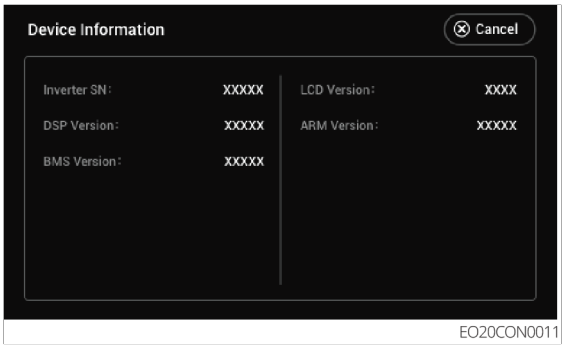

Figure71 Viewing Device Information

8 Maintenance

8.1 Power OFF the System

⚠DANGER

- When performing operation and maintenance on equipment within the system, please power down the system. Operating equipment while energized may cause equipment damage or risk of electric shock.
- After the equipment is powered off, internal components require a certain amount of time to discharge. Please wait according to the time specified on the label until the equipment is completely discharged.
- Restarting the battery should be performed using the air switch power-on method.
- When shutting down the battery system, strictly adhere to the battery system power-down requirements to prevent damage to the battery system.
- When there are multiple batteries in the system, powering down any one battery will power down all batteries.

NOTICE

- The circuit breakers between the inverter and battery, and between battery systems, must be installed in accordance with local laws and regulations.
- To ensure effective protection of the battery system, the cover plate of the battery system switch should remain closed, and the protective cover should automatically close after being opened. If the battery system switch is not used for a long time, it must be secured with screws.

Power-off Process

1. Disconnect the BACK-UP breaker.
2. Disconnect the generator/smart load switch.
3. Disconnect the ON-GRID breaker.
4. (Select according to local regulations) Disconnect the switch between the inverter

and the battery.

5. Power off the battery system:
   a. LX A5.0-10, LX A5.0-30: Press and hold the battery multi-function button for more than 5 seconds.
   b. GW16.1-BAT-LV-G10: Close the battery system integrated breaker or press and hold the battery system button for more than or equal to 5 seconds, and the battery system integrated breaker will automatically disconnect.
6. Disconnect the breaker between the PV components and the inverter.

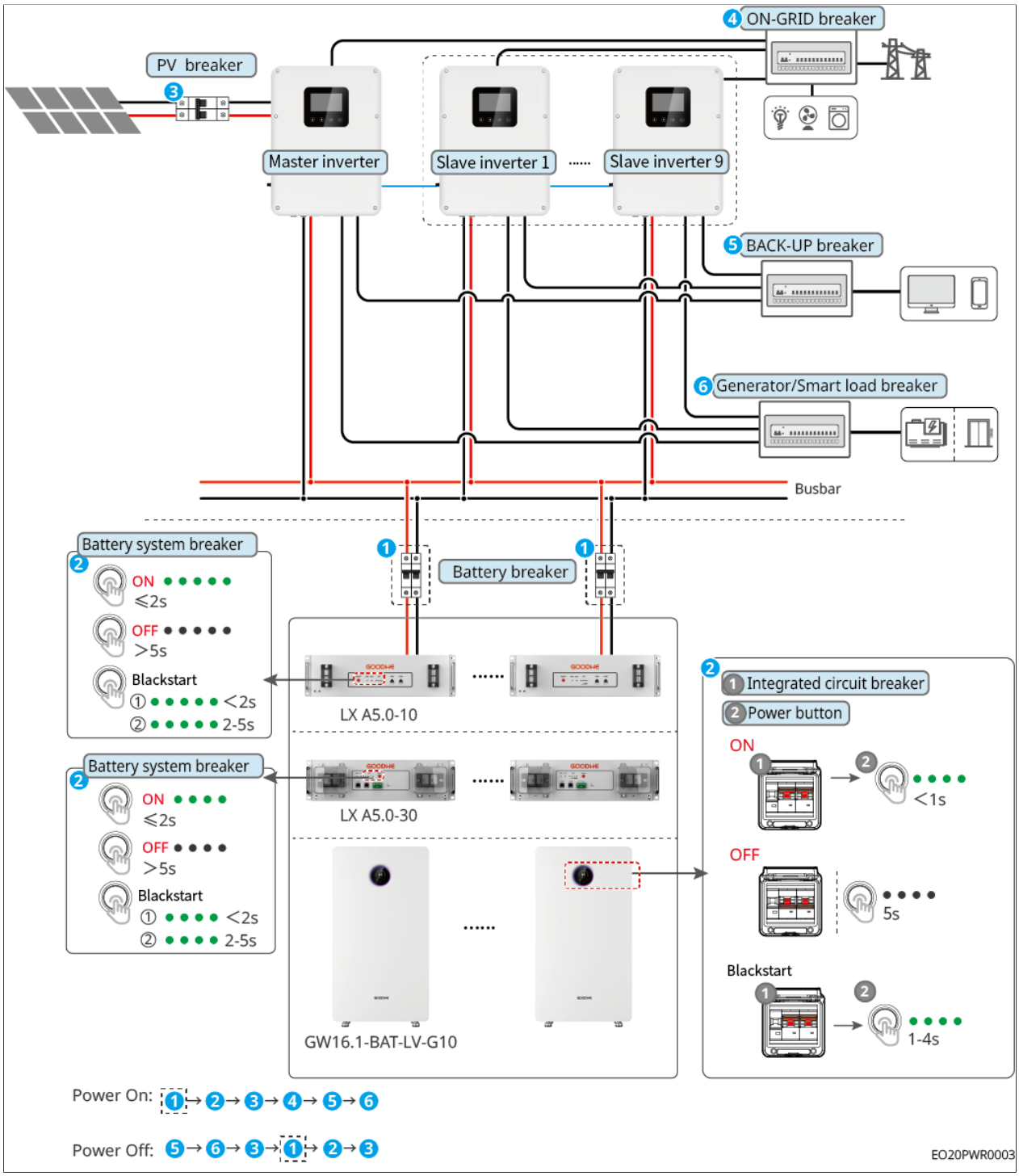

8.2 Removing the Equipment

DANGER

- Ensure the device is powered off.
- When operating the device, please wear personal protective equipment.
- When removing wiring terminals, use standard disassembly tools to avoid damaging the terminals or device.
- If not otherwise specified, the device disassembly method is the reverse order of the installation method, and this document will not elaborate further.

1. Power down the system.
2. Use labels to mark the cable types of the connected cables in the system.
3. Disconnect the connection cables of the Inverter, Battery, smart meter in the system, such as: DC cables, AC cables, Communication cable, PE cable.
4. Remove devices such as smart communication stick, Inverter, Battery, smart meter, etc.
5. Properly store the equipment. If it will be put into use later, ensure that the storage conditions meet the requirements.

8.3 Disposing of the Equipment

When the equipment can no longer be used and needs to be disposed of, please dispose of it according to the electrical waste disposal requirements of the regulations in the country/region where the equipment is located. The equipment must not be disposed of as general household waste.

8.4 Routine Maintenance

⚠WARNING

- If any issues are found that may affect the battery or energy storage inverter system, contact after-sales personnel. Do not disassemble privately.
- If exposed copper wires are found inside the conductive wires, do not touch them. High voltage hazard. Contact after-sales personnel. Do not disassemble privately.
- In case of other emergencies, contact after-sales personnel immediately. Operate under the guidance of after-sales personnel or wait for on-site operation by after-sales personnel.

Maintenance Item	Maintenance Method	Maintenance Cycle	Maintenance Purpose
System Cleaning	Check for foreign objects or dust on heat sinks, fans, and air inlets/outlets. Check if the installation space meets requirements, and check for debris accumulation around the device.	Once every six months	Prevent cooling failures.
System Installation	Check if the device is installed securely and if fastening screws are loose. Check for damage or deformation on the device exterior.	Once every six months to once a year	Confirm device installation stability.
Electrical Connections	Check for loose electrical connections, damaged cable sheathing, or exposed copper.	Once every six months to once a year	Confirm electrical connection reliability.
Sealing	Check if the sealing of the device's cable entry holes meets requirements. If gaps are too large or unsealed, re-seal them.	Once a year	Confirm machine sealing and waterproof integrity.

Maintenance Item	Maintenance Method	Maintenance Cycle	Maintenance Purpose
Battery Maintenance	If the battery has not been used or fully charged for an extended period, it is recommended to charge it regularly.	Once every 15 days	Protect battery lifespan.

8.5 fault

NOTICE
The manual fault content is updated on an irregular basis. Faults may vary slightly between different models. Please refer to the device's real-time display for specific information.

8.5.1 Viewing Fault/Alarms Information

All detailed fault and alarm information for the energy storage system is displayed in the **SEMS+ App and SEMS+ WEB**. If your product experiences an abnormality and you do not see relevant fault information in the **SEMS+ App or SEMS+ WEB**, please contact the after-sales service center.

- In SEMS+ App

1. Open the SEMS+ App and log in with any account.
2. On the home page, click "Alarms" to view alarm information for all power plants under the account.

- SEMS+ WEB

1. Open SEMS+ WEB and log in with any account.
2. On the power plant details interface, click "Alarms" to view all alarm information for the current power plant.

8.5.2 Fault Information and Troubleshooting

Please follow the methods below for troubleshooting. If the troubleshooting methods cannot help you, please contact the after-sales service center.

When contacting the after-sales service center, please collect the following information to facilitate a quick resolution.

1. Product information, such as: serial number, software version, device installation time, fault occurrence time, fault frequency, etc.
2. Device installation environment, such as: weather conditions, whether components are blocked, have shadows, etc. It is recommended to provide photos, videos, and other files to assist in problem analysis.
3. Grid conditions.

8.5.2.1 System Failure

If the system experiences a problem not listed, or if following the instructions still does not prevent the issue or abnormality, immediately stop operating the system and contact your dealer at once.

No.	fault	Solution
1	Cannot find the Smart Communication Stick wireless signal	1. Ensure no other devices are connected to the Smart Communication Stick wireless signal. 2. Ensure the App has been updated to the latest version. 3. Ensure the Smart Communication Stick is powered normally and the blue signal light is blinking or solid. 4. Ensure the smart device is within the communication range of the Smart Communication Stick. 5. Refresh the device list in the App. 6. Restart the inverter.
2	Unable to connect to the Smart Communication Stick wireless signal	1. Ensure no other devices are connected to the Smart Communication Stick wireless signal. 2. Restart the inverter or the communication stick, and try to connect to the Smart Communication Stick wireless signal again. 3. Ensure Bluetooth has been encrypted and paired successfully.

No.	fault	Solution
3	Unable to find the router SSID	1. Place the router closer to the Smart Communication Stick, or add a WiFi repeater to enhance the WiFi signal. 2. Reduce the number of devices connected to the router.
4	After all configurations are completed, the Smart Communication Stick fails to connect to the router	1. Restart the inverter. 2. Check if the network name, encryption method, and password in the WiFi configuration are the same as those of the router. 3. Restart the router. 4. Place the router closer to the Smart Communication Stick, or add a WiFi repeater to enhance the WiFi signal.
5	After all configurations are completed, the Smart Communication Stick fails to connect to the server	Restart the router and the inverter.

8.5.2.2 Inverter Fault

8.5.2.2.1 Troubleshooting (Fault Codes F01-F40)

Fault Code	Fault Name	Fault Cause	Troubleshooting Recommendation
F01	Grid Power Outage	1. Grid power outage. 2. AC line or AC switch disconnected.	1. The alarm will disappear automatically after grid power supply is restored. 2. Check if the AC line or AC switch is disconnected.

Fault Code	Fault Name	Fault Cause	Troubleshooting Recommendation
F02	Grid Overvoltage Protection	Grid voltage is higher than the allowable range, or the duration of high voltage exceeds the high voltage ride-through (HVRT) setting.	1. If it occurs occasionally, it may be a short-term grid abnormality. The inverter will resume normal operation after detecting normal grid conditions without manual intervention. 2. If it occurs frequently, check if the grid voltage is within the allowable range. If not, contact the local power operator. If it is, the grid overvoltage protection point can be modified after obtaining consent from the local power operator. 3. If normal operation cannot be restored for a long time, check if the AC side circuit breaker and output cables are properly connected.

Fault Code	Fault Name	Fault Cause	Troubleshooting Recommendation
F03	Grid Undervoltage Protection	Grid voltage is lower than the allowable range, or the duration of low voltage exceeds the low voltage ride-through (LVRT) setting.	1. If it occurs occasionally, it may be a short-term grid abnormality. The inverter will resume normal operation after detecting normal grid conditions without manual intervention. 2. If it occurs frequently, check if the grid voltage is within the allowable range. If not, contact the local power operator. If it is, the grid undervoltage protection point can be modified after obtaining consent from the local power operator. 3. If normal operation cannot be restored for a long time, check if the AC side circuit breaker and output cables are properly connected.

Fault Code	Fault Name	Fault Cause	Troubleshooting Recommendation
F04	Grid Rapid Overvoltage Protection	Abnormal grid voltage detection or extremely high voltage triggers the fault.	1. If it occurs occasionally, it may be a short-term grid abnormality. The inverter will resume normal operation after detecting normal grid conditions without manual intervention. 2. If it occurs frequently, check if the grid voltage is within the allowable range. If not, contact the local power operator. If it is, the grid undervoltage protection point can be modified after obtaining consent from the local power operator. 3. If normal operation cannot be restored for a long time, check if the AC side circuit breaker and output cables are properly connected.
F05	10min Overvoltage Protection	The sliding average of grid voltage within 10min exceeds the range specified by safety regulations.	Check if the grid voltage is operating at a high voltage for an extended period. If it occurs frequently, check if the grid frequency is within the allowable range. If not, contact the local power operator. If it is, the grid 10min overvoltage protection point can be modified after obtaining consent from the local power operator.

Fault Code	Fault Name	Fault Cause	Troubleshooting Recommendation
F06	Grid Overfrequency	Grid abnormality: The actual grid frequency is higher than the local grid standard requirements.	1. If it occurs occasionally, it may be a short-term grid abnormality. The inverter will resume normal operation after detecting normal grid conditions without manual intervention. 2. If it occurs frequently, check if the grid frequency is within the allowable range. If not, contact the local power operator. If it is, the grid overfrequency protection point can be modified after obtaining consent from the local power operator.
F07	Grid Underfrequency	Grid abnormality: The actual grid frequency is lower than the local grid standard requirements.	1. If it occurs occasionally, it may be a short-term grid abnormality. The inverter will resume normal operation after detecting normal grid conditions without manual intervention. 2. If it occurs frequently, check if the grid frequency is within the allowable range. If not, contact the local power operator. If it is, the grid overfrequency protection point can be modified after obtaining consent from the local power operator.

Fault Code	Fault Name	Fault Cause	Troubleshooting Recommendation
F08	Grid Frequency Instability	Grid abnormality: The rate of change of the actual grid frequency does not comply with the local grid standard.	1. If it occurs occasionally, it may be a short-term grid abnormality. The inverter will resume normal operation after detecting normal grid conditions without manual intervention. 2. If it occurs frequently, check if the grid frequency is within the allowable range. If not, contact the local power operator.
F09	Anti-islanding Protection	The grid has been disconnected, but grid voltage is maintained due to the presence of loads. Grid connection is stopped according to safety protection requirements.	1. If it occurs occasionally, it may be a short-term grid abnormality. The inverter will resume normal operation after detecting normal grid conditions without manual intervention. 2. If it occurs frequently, check if the grid frequency is within the allowable range. If not, contact the local power operator.
F10	LVRT Undervoltage	Grid abnormality: The duration of abnormal grid voltage exceeds the time specified for low/high voltage ride-through.	1. If it occurs occasionally, it may be a short-term grid abnormality. The inverter will resume normal operation after detecting normal grid conditions without manual intervention. 2. If it occurs frequently, check if the grid voltage and frequency are within the allowable range and stable. If not, contact the local power operator.

Fault Code	Fault Name	Fault Cause	Troubleshooting Recommendation
F11	HVRT Overvoltage	Grid abnormality: The duration of abnormal grid voltage exceeds the time specified for low/high voltage ride-through.	1. If it occurs occasionally, it may be a short-term grid abnormality. The inverter will resume normal operation after detecting normal grid conditions without manual intervention. 2. If it occurs frequently, check if the grid voltage and frequency are within the allowable range and stable. If not, contact the local power operator.
F12	30mA GFCI Protection	The insulation impedance of the input to ground becomes low during inverter operation.	1. If it occurs occasionally, it may be caused by occasional external line abnormalities. Normal operation will resume after the fault is cleared, without manual intervention. 2. If it occurs frequently or normal operation cannot be restored for a long time, check if the PV string's ground impedance is too low.
F13	60mA GFCI Protection	The insulation impedance of the input to ground becomes low during inverter operation.	1. If it occurs occasionally, it may be caused by occasional external line abnormalities. Normal operation will resume after the fault is cleared, without manual intervention. 2. If it occurs frequently or normal operation cannot be restored for a long time, check if the PV string's ground impedance is too low.

Fault Code	Fault Name	Fault Cause	Troubleshooting Recommendation
F14	150mA GFCI Protection	The insulation impedance of the input to ground becomes low during inverter operation.	1. If it occurs occasionally, it may be caused by occasional external line abnormalities. Normal operation will resume after the fault is cleared, without manual intervention. 2. If it occurs frequently or normal operation cannot be restored for a long time, check if the PV string's ground impedance is too low.
F15	GFCI Gradual Change Protection	The insulation impedance of the input to ground becomes low during inverter operation.	1. If it occurs occasionally, it may be caused by occasional external line abnormalities. Normal operation will resume after the fault is cleared, without manual intervention. 2. If it occurs frequently or normal operation cannot be restored for a long time, check if the PV string's ground impedance is too low.
F16	DCI Level 1 Protection	The DC component of the inverter output current is higher than the safety regulation or the machine's default allowable range.	1. If it is caused by an abnormality introduced by an external fault, the inverter will automatically resume normal operation after the fault disappears, without manual intervention. 2. If this alarm occurs frequently, affecting normal power generation of the power station, contact the dealer or after-sales service center.

Fault Code	Fault Name	Fault Cause	Troubleshooting Recommendation
F17	DCI Level 2 Protection	The DC component of the inverter output current is higher than the safety regulation or the machine's default allowable range.	1. If it is caused by an abnormality introduced by an external fault, the inverter will automatically resume normal operation after the fault disappears, without manual intervention. 2. If this alarm occurs frequently, affecting normal power generation of the power station, contact the dealer or after-sales service center.

Fault Code	Fault Name	Fault Cause	Troubleshooting Recommendation
F18	Low Insulation Resistance	1. PV string short-circuited to protective ground. 2. The PV string is installed in a long-term humid environment with poor line-to-ground insulation. 3. Low insulation impedance of battery port lines to ground.	1. Check the impedance of the PV string/battery port to protective ground. A value greater than 80kΩ is normal. If the measured value is less than 80kΩ, locate and rectify the short circuit point. 2. Check if the inverter's protective ground wire is correctly connected. 3. If it is confirmed that the impedance is indeed lower than the default value in rainy weather conditions, reset the inverter's "Insulation Impedance Protection Point" via the App. For inverters in the Australian and New Zealand markets, the following alarm methods are also available when an insulation impedance fault occurs: 1. The inverter is equipped with a buzzer. When a fault occurs, the buzzer sounds continuously for 1 minute; if the fault is not resolved, the buzzer sounds again every 30 minutes. 2. If the inverter is added to the monitoring platform and the alarm notification method is set, alarm information can be sent to customers via email.

Fault Code	Fault Name	Fault Cause	Troubleshooting Recommendation
F19	Grounding Abnormal	1. The inverter's protective ground wire is not connected. 2. When the PV string output is grounded, the inverter output side is not connected to an isolation transformer.	1. Please confirm whether the inverter's protective ground wire is properly connected. 2. In scenarios where the PV string output is grounded, please confirm whether the inverter output side is connected to an isolation transformer.
F20	Hard Anti-backflow Protection	Load abnormal fluctuation	1. If it is caused by an abnormality introduced by an external fault, the inverter will automatically resume normal operation after the fault disappears, without manual intervention. 2. If this alarm occurs frequently, affecting normal power generation of the power station, contact the dealer or after-sales service center.

Fault Code	Fault Name	Fault Cause	Troubleshooting Recommendation
F21	Internal Comm Loss	Sub DSP1 communication timeout - Main DSP, Sub DSP2 communication timeout - Main DSP, Sub DSP2 communication timeout - Sub DSP1, Main DSP communication timeout - Sub DSP1, Main DSP communication timeout - Sub DSP2 or Sub DSP1 communication timeout - Sub DSP2: 1. Chip not powered on 2. Chip program version error	Turn off the AC output side switch and DC input side switch, wait for 5 minutes, then turn on the AC output side switch and DC input side switch. If the fault persists, contact the dealer or after-sales service center.

Fault Code	Fault Name	Fault Cause	Troubleshooting Recommendation
		Main DSP can module error, Sub DSP1 can module error or Sub DSP2 can module error: 1. Frame format error 2. Parity check error 3. can bus offline 4. Hardware CRC check error 5. Control bit is receive (send) during transmission (reception) 6. Transmission to an unauthorized unit	
F22	Generator Waveform Detection Fault	1. This fault will be displayed continuously when no generator is connected; 2. When the generator is operating, failure to meet generator safety regulations will trigger this fault.	1. Ignore this fault when no generator is connected; 2. When this fault occurs due to a generator fault, it is normal. After the generator recovers, wait for a period of time for the machine, and the fault will be cleared automatically; 3. This fault will not affect the normal operation of the off-grid mode. 4. When both the generator and grid are connected and meet safety requirements, the grid has priority for grid connection, and the system will operate in grid-connected status.
F23	Generator Abnormal Connection		
F24	Generator Voltage Low		
F25	Generator Voltage High		
F26	Generator Frequency Low		

Fault Code	Fault Name	Fault Cause	Troubleshooting Recommendation
F27	Generator Frequency High		
F28	Parallel Unit I/O Self-test Abnormal	Parallel communication cable is not securely connected or parallel IO chip is damaged	Check if the parallel communication cable is securely connected, then check if the IO chip is damaged. If yes, replace the IO chip.
F29	Paralell Grid Line Reversed	Some units' grid lines are reversed with others	Reconnect the grid lines
F30	AC HCT check Abnormal	AC sensor has sampling abnormality	Turn off the AC output side switch and DC input side switch, wait for 5 minutes, then turn on the AC output side switch and DC input side switch. If the fault persists, contact the dealer or after-sales service center.
F31	GFCI HCT Check Abnormal	Leakage current sensor has sampling abnormality	Turn off the AC output side switch and DC input side switch, wait for 5 minutes, then turn on the AC output side switch and DC input side switch. If the fault persists, contact the dealer or after-sales service center.
F32	Inverter Internal Failure	Inverter has a fault	Turn off the AC output side switch and DC input side switch, wait for 5 minutes, then turn on the AC output side switch and DC input side switch. If the fault persists, contact the dealer or after-sales service center.

Fault Code	Fault Name	Fault Cause	Troubleshooting Recommendation
F33	Flash Read/Write Error	Possible causes: flash content changed; flash lifespan exhausted;	1. Upgrade to the latest program version 2. Contact the dealer or after-sales service center
F34	AFCI Check Failure	During the arc fault self-test, the arc fault module did not detect an arc fault as required.	Turn off the AC output side switch and DC input side switch, wait for 5 minutes, then turn on the AC output side switch and DC input side switch. If the fault persists, contact the dealer or after-sales service center.
F35	Cabinet Overtemperature	Cabinet temperature is too high, possible causes: 1. Inverter installation location is not ventilated. 2. Ambient temperature is too high. 3. Internal fan operation is abnormal.	1. Check if the ventilation at the inverter installation location is good and if the ambient temperature exceeds the maximum allowable ambient temperature range. 2. If it is not ventilated or the ambient temperature is too high, improve its ventilation and heat dissipation conditions. 3. If ventilation and ambient temperature are normal, contact the dealer or after-sales service center.

Fault Code	Fault Name	Fault Cause	Troubleshooting Recommendation
F36	Bus Overvoltage	BUS overvoltage, possible causes: 1. PV voltage is too high; 2. Inverter BUS voltage sampling is abnormal; 3. The isolation effect of the dual-split transformer at the inverter's rear end is poor, causing mutual interference when two inverters are connected in parallel, resulting in DC overvoltage alarm when one inverter is connected to the grid;	Turn off the AC output side switch and DC input side switch, wait for 5 minutes, then turn on the AC output side switch and DC input side switch. If the fault persists, contact the dealer or after-sales service center.

Fault Code	Fault Name	Fault Cause	Troubleshooting Recommendation
F37	PV Input Overvoltage	PV input voltage is too high, possible cause: PV array configuration error, too many PV panels connected in series in a string, resulting in the string's open-circuit voltage being higher than the inverter's maximum operating voltage	Check the series configuration of the corresponding PV array string to ensure the string's open-circuit voltage does not exceed the inverter's maximum operating voltage. After the PV array is correctly configured, the inverter alarm will disappear automatically.
F38	PV Continuous Hardware Overcurrent	1. Component configuration is unreasonable 2. Hardware damage	Turn off the AC output side switch and DC input side switch, wait for 5 minutes, then turn on the AC output side switch and DC input side switch. If the fault persists, contact the dealer or after-sales service center.
F39	PV Continuous Software Overcurrent	1. Component configuration is unreasonable 2. Hardware damage	Turn off the AC output side switch and DC input side switch, wait for 5 minutes, then turn on the AC output side switch and DC input side switch. If the fault persists, contact the dealer or after-sales service center.

Fault Code	Fault Name	Fault Cause	Troubleshooting Recommendation
F40, F98	String Reverse Connection (String 1-n) n: Determined based on the actual number of inverter strings	PV string reverse connection	Check if the string is reverse connected.

8.5.2.2.2 Troubleshooting (Fault Code F41-F80)

Fault Code	Fault Name	Fault Cause	Troubleshooting Suggestion
F41	Generator Port Overload	1. Off-grid side output exceeds specifications. 2. Off-grid side short circuit. 3. Off-grid terminal voltage is too low. 4. When used as a large load port, the large load exceeds specifications.	Confirm the off-grid side output voltage, current, power and other data to identify the cause of the problem.

Fault Code	Fault Name	Fault Cause	Troubleshooting Suggestion
F42	DC Arcing Failure (String 1-n) n: Determined by the actual number of inverter strings.	1. DC side connection terminals are loose; 2. DC side connection terminals have poor contact; 3. DC cable core is damaged or has poor contact.	1. After the machine reconnects to the grid, check if the voltage and current of each string abnormally decrease or become zero; 2. Check if the DC side terminals are securely connected.
F43	Grid Waveform Abnormal	Utility grid abnormality: Grid voltage detection anomaly triggers the fault.	1. If it occurs occasionally, it may be due to a short-term grid anomaly. The inverter will resume normal operation after detecting a normal grid, requiring no manual intervention. 2. If it occurs frequently, please check if the grid voltage and frequency are within the allowable range and stable. If not, contact the local power operator.
F44	Grid Phase Loss	Utility grid abnormality: Single-phase voltage drop in the grid.	1. If it occurs occasionally, it may be due to a short-term grid anomaly. The inverter will resume normal operation after detecting a normal grid, requiring no manual intervention. 2. If it occurs frequently, please check if the grid voltage and frequency are within the allowable range and stable. If not, contact the local power operator.

Fault Code	Fault Name	Fault Cause	Troubleshooting Suggestion
F45	Grid Voltage Imbalance	Excessive difference in grid phase voltages.	1. If it occurs occasionally, it may be due to a short-term grid anomaly. The inverter will resume normal operation after detecting a normal grid, requiring no manual intervention. 2. If it occurs frequently, please check if the grid voltage and frequency are within the allowable range and stable. If not, contact the local power operator.
F46	Grid Phase Sequence Failure	Inverter and grid wiring abnormality: Wiring is not in positive sequence.	1. Check if the inverter and grid wiring are in positive sequence. The fault will disappear automatically after correct wiring (e.g., swapping any two live wires). 2. If the fault persists despite correct wiring, contact the dealer or after-sales service center.
F47	Grid Rapid Shutdown Protection	Rapidly shuts down output after detecting a grid power outage condition.	The fault disappears automatically after grid power supply is restored.
F48	Grid Neutral Wire Loss (Split Grid)	Neutral wire loss in a split-phase grid.	1. The alarm disappears automatically after grid power supply is restored. 2. Check if the AC circuit or AC switch is open.
F49	L-PE Short Circuit	Output phase line has low impedance or short circuit to PE.	Measure the impedance of the output phase line to PE, locate the point with low impedance and repair it.

Fault Code	Fault Name	Fault Cause	Troubleshooting Suggestion
F50	DCV Level 1 Protection	Load abnormal fluctuation	1. If it is caused by an external fault, the inverter will automatically resume normal operation after the fault disappears, requiring no manual intervention. 2. If this alarm occurs frequently and affects normal power generation of the plant, contact the dealer or after-sales service center.
F51	DCV Level 2 Protection	Load abnormal fluctuation	
F52	Leakage Current (GFCI) Multiple Fault Shutdown	North American safety regulations require manual recovery or waiting 24h after multiple faults, no automatic recovery.	Please check if the PV string's impedance to ground is too low.
F53	DC Arcing (AFCI) Multiple Fault Shutdown	North American safety regulations require manual recovery or waiting 24h after multiple faults, no automatic recovery.	1. After the machine reconnects to the grid, check if the voltage and current of each string abnormally decrease or become zero; 2. Check if the DC side terminals are securely connected.
F54	External Communication Link Break	Inverter external device communication lost, possibly due to peripheral power issue, communication protocol mismatch, or not configured for the corresponding peripheral.	Determine based on actual model and detection enable bits. Some models do not support detection for unsupported peripherals.

Fault Code	Fault Name	Fault Cause	Troubleshooting Suggestion
F55	Back-up Port Overload Fault	Prevents the inverter from sustaining overload output.	Turn off some off-grid loads to reduce the inverter's off-grid output power.
F56	Back-up Port Overvoltage Fault	Prevents inverter output overvoltage from damaging loads.	1. If it occurs occasionally, it may be caused by load switching and requires no manual intervention. 2. If it occurs frequently, contact the dealer or after-sales service center.
F57	External Box Fault	Wait time for Box relay switching is too long during grid-to-off-grid transition.	1. Check if the Box is working properly; 2. Check if the Box communication wiring is correct;
F58	CT Loss Fault	CT connection wire disconnected (Japanese safety regulation requirement).	Check if the CT wiring is correct;
F59	Parallel CAN Communication Abnormal	Parallel communication cable not securely connected or some machines are offline.	Check if all machines are powered on and if the parallel communication cables are securely connected.
F60	Parallel Back-up Connection Reversed	Backup lines of some machines are reversed with others.	Reconnect the backup lines.
F61	Inverter Soft Start Failure	Inverter soft start failure during off-grid cold start.	Check if the inverter module is damaged.

Fault Code	Fault Name	Fault Cause	Troubleshooting Suggestion
F62	AC HCT Failure	HCT sensor abnormality exists.	Turn off the AC output side switch and DC input side switch, wait for 5 minutes, then turn on the AC output side switch and DC input side switch. If the fault persists, contact the dealer or after-sales service center.
F63	GFCI HCT Failure	Leakage current sensor abnormality exists.	Turn off the AC output side switch and DC input side switch, wait for 5 minutes, then turn on the AC output side switch and DC input side switch. If the fault persists, contact the dealer or after-sales service center.
F64	Inverter Internal Failure	Inverter fault exists.	Turn off the AC output side switch and DC input side switch, wait for 5 minutes, then turn on the AC output side switch and DC input side switch. If the fault persists, contact the dealer or after-sales service center.
F65	AC Terminal Overtemperature	AC terminal temperature is too high. Possible causes: 1. Inverter installation location is not ventilated. 2. Ambient temperature is too high. 3. Internal fan operation is abnormal.	1. Check if the inverter installation location has good ventilation and if the ambient temperature exceeds the maximum allowable range. 2. If ventilation is poor or ambient temperature is too high, improve its ventilation and heat dissipation conditions. 3. If both ventilation and ambient temperature are normal, contact the dealer or after-sales service center.

Fault Code	Fault Name	Fault Cause	Troubleshooting Suggestion
F66	INV Module Overtemperature	Inverter module temperature is too high. Possible causes: 1. Inverter installation location is not ventilated. 2. Ambient temperature is too high. 3. Internal fan operation is abnormal.	1. Check if the inverter installation location has good ventilation and if the ambient temperature exceeds the maximum allowable range. 2. If ventilation is poor or ambient temperature is too high, improve its ventilation and heat dissipation conditions. 3. If both ventilation and ambient temperature are normal, contact the dealer or after-sales service center.
F67	Boost Module Overtemperature	Boost module temperature is too high. Possible causes: 1. Inverter installation location is not ventilated. 2. Ambient temperature is too high. 3. Internal fan operation is abnormal.	1. Check if the inverter installation location has good ventilation and if the ambient temperature exceeds the maximum allowable range. 2. If ventilation is poor or ambient temperature is too high, improve its ventilation and heat dissipation conditions. 3. If both ventilation and ambient temperature are normal, contact the dealer or after-sales service center.

Fault Code	Fault Name	Fault Cause	Troubleshooting Suggestion
F68	AC Capacitor Overtemperature	Output filter capacitor temperature is too high. Possible causes: 1. Inverter installation location is not ventilated. 2. Ambient temperature is too high. 3. Internal fan operation is abnormal.	1. Check if the inverter installation location has good ventilation and if the ambient temperature exceeds the maximum allowable range. 2. If ventilation is poor or ambient temperature is too high, improve its ventilation and heat dissipation conditions. 3. If both ventilation and ambient temperature are normal, contact the dealer or after-sales service center.
F69	PV IGBT Short Circuit Fault	Possible causes: 1. IGBT short circuit 2. Inverter sampling circuit abnormality	Turn off the AC output side switch and DC input side switch, wait for 5 minutes, then turn on the AC output side switch and DC input side switch. If the fault persists, contact the dealer or after-sales service center.
F70	PV IGBT Open Circuit Fault	1. Software issue causing no PWM generation: 2. Drive circuit abnormality: 3. IGBT open circuit	
F71	NTC Abnormal	NTC temperature sensor abnormality.	Turn off the AC output side switch and DC input side switch, wait for 5 minutes, then turn on the AC output side switch and DC input side switch. If the fault persists, contact the dealer or after-sales service center.

Fault Code	Fault Name	Fault Cause	Troubleshooting Suggestion
F72	PWM Abnormal	PWM abnormal waveform detected.	Turn off the AC output side switch and DC input side switch, wait for 5 minutes, then turn on the AC output side switch and DC input side switch. If the fault persists, contact the dealer or after-sales service center.
F73	CPU Interrupt Abnormal	CPU interrupt abnormality.	Turn off the AC output side switch and DC input side switch, wait for 5 minutes, then turn on the AC output side switch and DC input side switch. If the fault persists, contact the dealer or after-sales service center.
F74	Microelectronic Fault	Functional safety detection detected an abnormality.	Turn off the AC output side switch and DC input side switch, wait for 5 minutes, then turn on the AC output side switch and DC input side switch. If the fault persists, contact the dealer or after-sales service center.
F75	PV HCT Fault	Boost current sensor abnormality.	Turn off the AC output side switch and DC input side switch, wait for 5 minutes, then turn on the AC output side switch and DC input side switch. If the fault persists, contact the dealer or after-sales service center.
F76	1.5V Reference Abnormal	Reference circuit fault.	Turn off the AC output side switch and DC input side switch, wait for 5 minutes, then turn on the AC output side switch and DC input side switch. If the fault persists, contact the dealer or after-sales service center.
F77	0.3V Reference Abnormal	Reference circuit fault.	
F78	CPLD Version Identification Error	CPLD version identification error.	Turn off the AC output side switch and DC input side switch, wait for 5 minutes, then turn on the AC output side switch and DC input side switch. If the fault persists, contact the dealer or after-sales service center.

Fault Code	Fault Name	Fault Cause	Troubleshooting Suggestion
F79	CPLD Communication Fault	CPLD and DSP communication content error or timeout.	Turn off the AC output side switch and DC input side switch, wait for 5 minutes, then turn on the AC output side switch and DC input side switch. If the fault persists, contact the dealer or after-sales service center.
F80	Model Identification Fault	Fault regarding model identification error.	Turn off the AC output side switch and DC input side switch, wait for 5 minutes, then turn on the AC output side switch and DC input side switch. If the fault persists, contact the dealer or after-sales service center.

8.5.2.2.3 Troubleshooting (Fault Codes F81-F121)

Fault Code	Fault Name	Possible Cause	Troubleshooting Recommendation
F81	P-Bus Overvoltage		Disconnect the AC output side switch and the DC input side switch, wait for 5 minutes, then close the AC output side switch and the DC input side switch. If the fault persists, please contact the dealer or after-sales service center.

Fault Code	Fault Name	Possible Cause	Troubleshooting Recommendation
F82	N-Bus Overvoltage	BUS overvoltage, possible causes: 1. PV voltage too high; 2. Inverter BUS voltage sampling abnormal; 3. Poor isolation effect of the dual-split transformer behind the inverter, causing mutual interference when two inverters are grid-connected, with one inverter reporting DC overvoltage during grid connection;	
F83	Bus Overvoltage (Sub CPU1)		Disconnect the AC output side switch and the DC input side switch, wait for 5 minutes, then close the AC output side switch and the DC input side switch. If the fault persists, please contact the dealer or after-sales service center.
F84	P-Bus Overvoltage (Sub CPU1)		

Fault Code	Fault Name	Possible Cause	Troubleshooting Recommendation
F85	N-Bus Overvoltage (Sub CPU1)	BUS overvoltage, possible causes: 1. PV voltage too high; 2. Inverter BUS voltage sampling abnormal; 3. Poor isolation effect of the dual-split transformer behind the inverter, causing mutual interference when two inverters are grid-connected, with one inverter reporting DC overvoltage during grid connection;	
F86	Bus Overvoltage (Sub CPU2)		Disconnect the AC output side switch and the DC input side switch, wait for 5 minutes, then close the AC output side switch and the DC input side switch. If the fault persists, please contact the dealer or after-sales service center.
F87	P-Bus Overvoltage (Sub CPU2)		

Fault Code	Fault Name	Possible Cause	Troubleshooting Recommendation
F88	N-Bus Overvoltage (Sub CPU2)	BUS overvoltage, possible causes: 1. PV voltage too high; 2. Inverter BUS voltage sampling abnormal; 3. Poor isolation effect of the dual-split transformer behind the inverter, causing mutual interference when two inverters are grid-connected, with one inverter reporting DC overvoltage during grid connection;	
F89	P-Bus Overvoltage(CPLD)		Disconnect the AC output side switch and the DC input side switch, wait for 5 minutes, then close the AC output side switch and the DC input side switch. If the fault persists, please contact the dealer or after-sales service center.

Fault Code	Fault Name	Possible Cause	Troubleshooting Recommendation
F90	N-Bus Overvoltage(CPLD)	BUS overvoltage, possible causes: 1. PV voltage too high; 2. Inverter BUS voltage sampling abnormal; 3. Poor isolation effect of the dual-split transformer behind the inverter, causing mutual interference when two inverters are grid-connected, with one inverter reporting DC overvoltage during grid connection;	
F91	FlyCap Software Overvoltage	FlyCap overvoltage, possible causes: 1. PV voltage too high; 2. Inverter flycap voltage sampling abnormal;	Disconnect the AC output side switch and the DC input side switch, wait for 5 minutes, then close the AC output side switch and the DC input side switch. If the fault persists, please contact the dealer or after-sales service center.
F92	FlyCap Hardware Overvoltage		

Fault Code	Fault Name	Possible Cause	Troubleshooting Recommendation
F93	FlyCap Undervoltage	FlyCap undervoltage, possible causes: 1. PV energy insufficient; 2. Inverter flycap voltage sampling abnormal;	Disconnect the AC output side switch and the DC input side switch, wait for 5 minutes, then close the AC output side switch and the DC input side switch. If the fault persists, please contact the dealer or after-sales service center
F94	FlyCap Precharge Failure	FlyCap precharge failure, possible causes: 1. PV energy insufficient; 2. Inverter flycap voltage sampling abnormal;	Disconnect the AC output side switch and the DC input side switch, wait for 5 minutes, then close the AC output side switch and the DC input side switch. If the fault persists, please contact the dealer or after-sales service center
F95	FlyCap Precharge Abnormal	1. Control loop parameters unreasonable 2. Hardware damaged	Disconnect the AC output side switch and the DC input side switch, wait for 5 minutes, then close the AC output side switch and the DC input side switch. If the fault persists, please contact the dealer or after-sales service center
F96, F97	String Overcurrent(String1-n) n: determined by the actual number of inverter strings	Possible causes: 1. String overcurrent; 2. String current sensor abnormal	Disconnect the AC output side switch and the DC input side switch, wait for 5 minutes, then close the AC output side switch and the DC input side switch. If the fault persists, please contact the dealer or after-sales service center

Fault Code	Fault Name	Possible Cause	Troubleshooting Recommendation
F99, F100	String Loss(String1-n) n: determined by the actual number of inverter strings	String fuse open (if present)	Check if the fuse is open.
F101	Battery1 Precharge fault	Battery1 precharge circuit fault (precharge resistor burnt, etc.)	Check if the precharge circuit is good, and whether the battery voltage matches the bus voltage after only the battery is powered on. If not, please contact the dealer or after-sales service center.
F102	Battery1 Relay Failure	Battery1 relay cannot operate normally	After the battery is powered on, check if the battery relay is working, and if a closing sound is heard. If not, please contact the dealer or after-sales service center.
F103	Battery1 Connection Overvoltage	Battery1 connection voltage exceeds the machine's rated range	Confirm if the battery voltage is within the machine's rated range.
F104	Battery2 Precharge fault	Battery2 precharge circuit fault (precharge resistor burnt, etc.)	Check if the precharge circuit is good, and whether the battery voltage matches the bus voltage after only the battery is powered on. If not, please contact the dealer or after-sales service center.

Fault Code	Fault Name	Possible Cause	Troubleshooting Recommendation
F105	Battery2 Relay Failure	Battery2 relay cannot operate normally	After the battery is powered on, check if the battery relay is working, and if a closing sound is heard. If not, please contact the dealer or after-sales service center.
F106	Battery2 Connection Overvoltage	Battery2 connection voltage exceeds the machine's rated range	Confirm if the battery voltage is within the machine's rated range.
F107	On-grid PWM Sync Failure	Abnormal during carrier synchronization grid connection	1. Check if the sync line connection is normal 2. Check if the master/slave settings are normal; 3. Disconnect the AC output side switch and the DC input side switch, wait for 5 minutes, then close the AC output side switch and the DC input side switch. If the fault persists, please contact the dealer or after-sales service center.
F108	DSP Communication fault	-	-
F109	External STS fault	Inverter and STS connection cable abnormal	Check if the wiring sequence of the harness between the inverter and the STS corresponds one-to-one in order.

Fault Code	Fault Name	Possible Cause	Troubleshooting Recommendation
F110	Export Limit Protection	1. Inverter reports error and disconnects from grid 2. meter communication unstable 3. Reverse power flow condition occurs	1. Check if the inverter has other error messages. If yes, handle them accordingly; 2. Check if the meter connection is reliable; 3. If this alarm occurs frequently, affecting normal power generation of the plant, please contact the dealer or after-sales service center.
F111	Bypass Overload	-	-
F112	Black Start Failure	-	-
F113	Offgrid AC Ins Volt High	-	-
F114	Relay Failure2	Relay abnormal, reasons: 1. Relay abnormal (relay short circuit) 2. Relay sampling circuit abnormal. 3. AC side wiring abnormal (possible loose connection or short circuit)	Disconnect the AC output side switch and the DC input side switch, wait for 5 minutes, then close the AC output side switch and the DC input side switch. If the fault persists, please contact the dealer or after-sales service center.
F115	SVG Precharge Disabled	SVG precharge hardware failure	Contact the dealer or after-sales service center.
F116	Nighttime SVG PID Prevention fault	PID prevention hardware abnormal	

Fault Code	Fault Name	Possible Cause	Troubleshooting Recommendation
F117	DSP Version Identification Error	DSP software version identification error	Disconnect the AC output side switch and the DC input side switch, wait for 5 minutes, then close the AC output side switch and the DC input side switch. If the fault persists, please contact the dealer or after-sales service center.
F118	MOS Continuous Overvoltage	1. Software issue causing inverter drive to turn off earlier than flyback drive: 2. Inverter drive circuit abnormal causing failure to turn on: 3. PV voltage too high; 4. Mos voltage sampling abnormal;	Disconnect the AC output side switch and the DC input side switch, wait for 5 minutes, then close the AC output side switch and the DC input side switch. If the fault persists, please contact the dealer or after-sales service center.
F119	Bus Short Circuit fault	Hardware damaged	If the inverter remains off-grid after a BUS short circuit fault occurs, please contact the dealer or after-sales service center.
F120	Bus Sampling Abnormal	1. BUS voltage sampling hardware fault	Disconnect the AC output side switch and the DC input side switch, wait for 5 minutes, then close the AC output side switch and the DC input side switch. If the fault persists, please contact the dealer or after-sales service center.

Fault Code	Fault Name	Possible Cause	Troubleshooting Recommendation
F121	DC Side Sampling Abnormal	1. BUS voltage sampling hardware fault 2. Battery voltage sampling hardware fault 3. Dcrly relay fault	Disconnect the AC output side switch and the DC input side switch, wait for 5 minutes, then close the AC output side switch and the DC input side switch. If the fault persists, please contact the dealer or after-sales service center.

8.5.2.2.4 Troubleshooting (Fault Codes F122-F163)

Fault Code	Fault Name	Possible Cause	Troubleshooting Recommendation
F122	PV Access Mode Setting Error	There are three PV Access Modes, taking a four-channel MPPT as an example: 1. Parallel Mode: i.e., AAAA mode (same-source mode), PV1-PV4 are from the same source, all 4 channels of PV are connected to the same solar panel. 2. Partial Parallel Mode: i.e., AACC mode, PV1 and PV2 are connected from the same source, PV3 and PV4 are connected from the same source. 3. Independent Mode: i.e., ABCD mode (non-same-source), PV1, PV2, PV3, PV4 are connected independently, each of the 4 PV channels connects to one solar panel. This fault is reported	Check if the PV Access Mode is set correctly (ABCD, AACC, AAAA), and reset the PV Access Mode correctly. 1. Confirm that all actual PV strings are correctly connected; 2. If the PV strings are correctly connected, check via the APP or screen whether the currently set "PV Access Mode" corresponds to the actual connection mode; 3. If the currently set "PV Access Mode" does not match the actual connection mode, use the APP or screen to set the "PV Access Mode" to the mode consistent with the actual situation. After setting, disconnect the PV and AC power supply and restart; 4. After setting, if the current "PV Access Mode" matches the actual connection mode but the fault persists, contact the dealer or after-sales service center.

Fault Code	Fault Name	Possible Cause	Troubleshooting Recommendation
		if the actual PV connection mode does not match the PV Access Mode set on the device.	
F123	Multi-channel PV Phase Error	PV Input Mode setting error	Check if the PV Access Mode is set correctly (ABCD, AACC, AAAA), and reset the PV Access Mode correctly. 1. Confirm that all actual PV strings are correctly connected; 2. If the PV strings are correctly connected, check via the APP or screen whether the currently set "PV Access Mode" corresponds to the actual connection mode; 3. If the currently set "PV Access Mode" does not match the actual connection mode, use the APP or screen to set the "PV Access Mode" to the mode consistent with the actual situation. After setting, disconnect the PV and AC power supply and restart; 4. After setting, if the current "PV Access Mode" matches the actual connection mode but the fault persists, contact the dealer or after-sales service center.
F124	Battery 1 Reverse Polarity fault	Battery 1 positive and negative terminals are reversed	Check if the battery and machine terminal polarities are consistent.

Fault Code	Fault Name	Possible Cause	Troubleshooting Recommendation
F125	Battery 2 Reverse Polarity fault	Battery 2 positive and negative terminals are reversed	Check if the battery and machine terminal polarities are consistent.
F126	Abnormal Battery Connection	Abnormal Battery Connection	Check if the battery is working normally.
F127	BAT Overtemperature	Battery temperature is too high, possible reasons: 1. Inverter installation location is not ventilated. 2. Ambient temperature is too high. 3. Internal fan operation is abnormal.	Disconnect the AC output side switch and DC input side switch, close them after 5 minutes. If the fault still exists, contact the dealer or after-sales service center.
F128	Ref Voltage Abnormal	Reference circuit fault	Disconnect the AC output side switch and DC input side switch, close them after 5 minutes. If the fault still exists, contact the dealer or after-sales service center.
F129	Cabinet Under Temperature	Cabinet temperature is too low, possible reason: ambient temperature is too low.	Disconnect the AC output side switch and DC input side switch, close them after 5 minutes. If the fault still exists, contact the dealer or after-sales service center.
F130	AC Side SPD fault	AC side surge protective device failure	Replace the AC side surge protective device.

Fault Code	Fault Name	Possible Cause	Troubleshooting Recommendation
F131	DC Side SPD fault	DC side surge protective device failure	Replace the DC side surge protective device.
F132	Internal Fan Abnormal	Internal fan abnormal, possible reasons: 1. Fan power supply abnormal; 2. Mechanical fault (stall); 3. Fan aging or damage.	Disconnect the AC output side switch and DC input side switch, close them after 5 minutes. If the fault still exists, contact the dealer or after-sales service center.
F133	External Fan Abnormal	External fan abnormal, possible reasons: 1. Fan power supply abnormal; 2. Mechanical fault (stall); 3. Fan aging or damage.	
F134	PID Diagnosis Abnormal	PID hardware fault or PV voltage too high causing PID suspension	PID suspension warning caused by high PV voltage requires no action. PID hardware fault can be cleared by turning the PID switch off and then on. Replace the PID device.

Fault Code	Fault Name	Possible Cause	Troubleshooting Recommendation
F135	Trip-Switch Trip Warning	Possible reasons: Overcurrent or PV reverse polarity caused the trip-switch to open;	Contact the dealer or after-sales service center; The reason for tripping is PV short circuit or reverse polarity. Check if there is any historical PV short circuit warning or historical PV reverse polarity warning. If exists, maintenance personnel need to check the corresponding PV condition. After checking and confirming no fault, you can manually close the trip-switch and clear this warning via the APP interface by clearing historical faults.
F136	Historical PV IGBT Short Circuit Warning	Possible reasons: Overcurrent caused the trip-switch to open;	Contact the dealer or after-sales service center; Maintenance personnel need to check, according to the historical PV short circuit warning subcode, whether the Boost hardware and the external string corresponding to the short circuit are faulty; After checking and confirming no fault, you can clear this warning via the APP interface by clearing historical faults.

Fault Code	Fault Name	Possible Cause	Troubleshooting Recommendation
F137, F138	Historical PV Reverse Polarity Warning (String 1-n) (n: determined by the actual number of inverter strings)	Possible reasons: PV reverse polarity caused the trip-switch to open;	Contact the dealer or after-sales service center; Maintenance personnel need to check, according to the historical PV reverse polarity warning subcode, whether the corresponding string is reversed, and check if there is a voltage difference in the PV panel configuration; After checking and confirming no fault, you can clear this warning via the APP interface by clearing historical faults.
F139	Flash Read/Write Error Warning	Possible reasons: 1. Flash content changed; 2. Flash end of life;	1. Upgrade to the latest firmware; 2. Contact the dealer or after-sales service center.
F140	Meter Comm Loss	This warning may only occur after anti-backflow function is enabled. Possible reasons: 1. Meter not connected; 2. Communication cable between meter and inverter is incorrectly wired.	Check meter wiring, connect the meter correctly. If the fault persists after checking, contact the dealer or after-sales service center.
F141	PV Panel Type Identification Failure	PV panel identification hardware abnormal	Contact the dealer or after-sales service center.

Fault Code	Fault Name	Possible Cause	Troubleshooting Recommendation
F142	PV String Mismatch	PV string mismatch, two strings under the same MPPT have different open-circuit voltage configurations	Check the open-circuit voltage of the two strings, configure strings with the same open-circuit voltage under the same MPPT. Prolonged string mismatch poses a safety risk.
F143	CT Not Connected	CT not connected	Check CT wiring.
F144	CT Reverse Polarity	CT reverse polarity	Check CT wiring.
F145	PE Loss	Protective earth (PE) not connected	Check the protective earth (PE) wire.
F146	String Terminal Temperature High (String 1~8)	Register 37176 PV terminal temperature alarm subcode 1 is set	-
F147	String Terminal Temperature High (String 9~16)	Register 37177 PV terminal temperature alarm subcode 2 is set	-
F148	String Terminal Temperature High (String 17~20)	Register 37178 PV terminal temperature alarm subcode 3 is set	-

Fault Code	Fault Name	Possible Cause	Troubleshooting Recommendation
F149	Historical PV Reverse Polarity Warning (String 33~48)	Possible reasons: PV reverse polarity caused the trip-switch to open;	Contact the dealer or after-sales service center; Maintenance personnel need to check, according to the historical PV reverse polarity warning subcode, whether the corresponding string is reversed, and check if there is a voltage difference in the PV panel configuration; After checking and confirming no fault, you can clear this warning via the APP interface by clearing historical faults.
F150	Battery 1 Low Voltage	Battery voltage below set value	-
F151	Battery 2 Low Voltage	Battery voltage below set value	-
F152	Low Voltage of Battery Power	Battery in non-charging mode, voltage below shutdown voltage	-
F153	Battery 1 High Voltage	-	-
F154	Battery 2 High Voltage	-	-

Fault Code	Fault Name	Possible Cause	Troubleshooting Recommendation
F155	Online Low Insulation Resistance	1. Photovoltaic string short-circuited to protective earth. 2. Photovoltaic string installed in a long-term humid environment with poor line-to-earth insulation.	1. Check the impedance of the photovoltaic string to protective earth. If a short circuit is found, rectify the short circuit point. 2. Check if the inverter's protective earth wire is correctly connected. 3. If it is confirmed that the impedance is indeed below the default value in rainy/cloudy conditions, reset the "Insulation Resistance Protection Point".
F156	Micro-grid Overload Warning	backup port input current too high	Occasional occurrence requires no action; If this warning appears frequently, contact the dealer or after-sales service center.
F157	Manual Reset	-	-
F158	Generator Phase Sequence Abnormal	-	-
F159	Multiplexed Port Configuration Abnormal	Multiplexed (Generator) port configured as micro-grid or heavy load, but a generator is actually connected	Use the APP to change the Multiplexed (Generator) port configuration.
F160	EMS Forced Off-grid	EMS issued forced off-grid command, but off-grid function is not enabled	Enable the off-grid function.
F161	Passive Anti-islanding Protection	-	-

Fault Code	Fault Name	Possible Cause	Troubleshooting Recommendation
F162	Grid Type Fault	Actual grid type (two-phase or split-phase) does not match the set safety standard	Switch to the corresponding safety standard according to the actual grid type.
F163	Grid Phase Instability	Grid abnormality: Grid voltage phase change rate does not comply with local grid standards.	1. If it occurs occasionally, it may be a temporary grid abnormality. The inverter will resume normal operation after detecting a normal grid, no manual intervention is required. 2. If it occurs frequently, check if the grid frequency is within the allowable range. If not, contact the local power operator.

8.5.2.2.5 Fault Symptom Handling

Fault Name	Fault Cause	Fault Handling Suggestion
Generator Failure	1. This fault will be displayed continuously when no generator is connected. 2. When the generator is operating, this fault will be triggered if generator safety regulations are not met.	1. If the generator is not connected, ignore this fault. 2. If this fault appears when the generator has a failure, it is normal. Wait for a period after the generator recovers, and the fault will clear automatically. 3. This fault will not affect the normal operation of off-grid mode. 4. When both the generator and the grid are connected and meet safety requirements, the grid has priority for grid connection, and the system will operate in grid-connected state.

Fault Name	Fault Cause	Fault Handling Suggestion
BMS Status Bit Error	BMS module failure	Disconnect the AC output side switch and the DC input side switch. After 5 minutes, close the AC output side switch and the DC input side switch. If the fault persists, please contact the dealer or after-sales service center.
Ambient Overtemperature	1. Poor machine ventilation 2. Hot air flows back to the ambient temperature sampling point	Disconnect the AC output side switch and the DC input side switch. After 5 minutes, close the AC output side switch and the DC input side switch. If the fault persists, please contact the dealer or after-sales service center.
PV Terminal Overtemperature	PV terminal overtemperature, possible causes: 1. Inverter installation location is not ventilated. 2. Ambient temperature is too high. 3. Internal fan operation is abnormal.	1. Check if the ventilation at the inverter installation location is good and if the ambient temperature exceeds the maximum allowable range. 2. If ventilation is poor or ambient temperature is too high, please improve the ventilation and heat dissipation conditions. 3. If both ventilation and ambient temperature are normal, please contact the dealer or after-sales service center.
BAT Terminal Overtemperature	BAT terminal overtemperature, possible causes: 1. Inverter installation location is not ventilated. 2. Ambient temperature is too high.	1. Check if the ventilation at the inverter installation location is good and if the ambient temperature exceeds the maximum allowable range. 2. If ventilation is poor or ambient temperature is too high, please improve the ventilation and heat dissipation conditions. 3. If both ventilation and ambient temperature are normal, please contact the dealer or after-sales service center.

Fault Name	Fault Cause	Fault Handling Suggestion
AC Terminal Overtemperature Warning	AC terminal overtemperature, possible causes: 1. Inverter installation location is not ventilated. 2. Ambient temperature is too high. 3. Internal fan operation is abnormal.	
BAT Terminal Overtemperature Warning	BAT terminal overtemperature, possible causes: 1. Inverter installation location is not ventilated. 2. Ambient temperature is too high.	1. Check if the ventilation at the inverter installation location is good and if the ambient temperature exceeds the maximum allowable range. 2. If ventilation is poor or ambient temperature is too high, please improve the ventilation and heat dissipation conditions. 3. If both ventilation and ambient temperature are normal, please contact the dealer or after-sales service center.
Three-phase on-grid fault	Three-phase external wiring error	Re-wire the connections.
External STS Failure	Abnormal cable connection between inverter and STS	Check if the wiring sequence of the harness between the inverter and the STS corresponds one by one in order.

Fault Name	Fault Cause	Troubleshooting Recommendation
Parallel Comm Timeout Shutdown	In parallel mode, if a slave unit does not communicate with the master unit for more than 400 seconds.	Check if the parallel communication harness is securely connected. Check if slave addresses are duplicated.
Three-phase off-grid phase loss fault	Phase loss in a three-phase system group.	1. Check if all inverters are powered on. 2. Check if each phase of the three-phase group is connected to an inverter.
EPO	External hardware EPO button triggered or remote EPO command triggered.	1. If it was triggered by a remote shutdown command, it can be ignored. 2. If not triggered intentionally, please contact the dealer or after-sales service center.
High Combustible Gas Concentration	Automatically triggered when the combustible gas device detects a concentration of 20% LEL or higher.	1. After the fault occurs, the machine will automatically open the air damper to exhaust and reduce the concentration. The fault will clear automatically after the concentration remains below 5% LEL for 15 minutes. 2. If the fault triggers a cluster-level fire protection fault, the air damper will automatically close. Confirm the damper status within 30s to ensure the cluster-level fire protection operates in a sealed space. 3. Please contact the dealer or after-sales service center.

Fault Name	Fault Cause	Troubleshooting Recommendation
Mismatch Between Combustible Gas Device Air Damper Open Command and Feedback Signal	Mismatch between the control signal to open the air damper and the feedback signal.	1. Check the harness signal connection for issues. 2. Please contact the dealer or after-sales service center.
One-Key Shutdown	Check via the App if the one-key shutdown function is enabled.	Disable the one-key shutdown.
Offline Shutdown	-	-
Remote Shutdown	-	-
On-Grid SPD Fault	-	1. Try restarting the machine and observe if the fault clears; 2. If the fault persists after restart, please contact the dealer or after-sales service center.
Off-Grid SPD Fault	-	1. Try restarting the machine and observe if the fault clears; 2. If the fault persists after restart, please contact the dealer or after-sales service center.

Fault Name	Fault Cause	Troubleshooting Recommendation
Child Node Communication Failure	Internal Comm Abnormal	1. Try restarting the machine and observe if the fault clears; 2. If the fault persists after restart, please contact the dealer or after-sales service center.
Dehumidifier Communication Fault	Communication link abnormality between the dehumidifier and the LC control box.	1. Check the communication link harness and observe if the fault clears; 2. Try restarting the machine and observe if the fault clears; 3. If the fault persists after restart, please contact the dealer or after-sales service center.
Combustible Gas Detection Device Communication Fault	1. The combustible gas device was not properly configured with the 485 address set to 2 during production. 2. Communication link abnormality between the combustible gas device and the LC control box.	1. Check the communication link harness and observe if the fault clears; 2. Try restarting the machine and observe if the fault clears; 3. Use the method provided by the combustible gas device manufacturer to check if the device address is 2. If not, modify it; 4. If the fault persists after restart, please contact the dealer or after-sales service center.

Fault Name	Fault Cause	Troubleshooting Recommendation
DG Communication Failure	Communication link abnormality between the control board and the diesel generator.	1. Check the communication link harness and observe if the fault clears; 2. Try restarting the machine and observe if the fault clears; 3. If the fault persists after restart, please contact the dealer or after-sales service center.
Battery Over Voltage	1. Single cell voltage too high 2. Voltage sensing line abnormality	Record the fault phenomenon, restart the battery, wait a few minutes, and confirm if the fault disappears. If the problem persists after restart, please contact the after-sales service center.
	1. Total battery voltage too high 2. Voltage sensing line abnormality	
Battery Undervoltage	1. Single cell voltage too low 2. Voltage sensing line abnormality	
	1. Total battery voltage too low 2. Voltage sensing line abnormality	
Battery Overcurrent	1. Charging current too high, battery current limiting abnormality: sudden change in temperature and voltage values 2. Inverter response abnormality	

Fault Name	Fault Cause	Troubleshooting Recommendation
	Battery discharge current too high	
Battery Overtemperature	1. Ambient Overtemperature 2. Temperature sensor abnormality	
Battery Undertemperature	1. Ambient temperature too low 2. Temperature sensor abnormality	
Battery Terminal Overtemperature	Terminal temperature too high	

Fault Name	Fault Cause	Troubleshooting Recommendation
Battery Imbalance	1. Excessive temperature difference. At different stages, the battery will limit its power, i.e., limit charge/discharge current. Therefore, this issue is generally difficult to occur. 2. Cell capacity degradation, leading to excessive internal resistance and large temperature rise during overcurrent, resulting in large temperature difference. 3. Poor welding of cell tabs, causing rapid temperature rise of the cell during overcurrent. 4. Temperature sampling issue; 5. Loose power line connection	

Fault Name	Fault Cause	Troubleshooting Recommendation
	1. Inconsistent cell aging levels 2. Slave board chip issues can also cause excessive cell voltage difference; 3. Slave board balancing issues can also cause excessive cell voltage difference 4. Caused by harness issues	
Insulation Resistance	Insulation resistance damaged.	Check if the ground wire is properly connected, restart the battery. If the problem persists after restart, please contact the after-sales service center.
Pre-charging Failure	Pre-charging Failure	Indicates that during pre-charging, the voltage across the pre-charge MOS always exceeds the specified threshold. Power cycle and observe if the fault persists. Check if wiring is correct and if the pre-charge MOS is damaged.
Sensing Line Fault	Battery sensing line poor contact or disconnected.	Check wiring, restart the battery. If the problem persists after restart, please contact the after-sales service center.
	Cell voltage sensing line poor contact or disconnected.	Check wiring, restart the battery. If the problem persists after restart, please contact the after-sales service center.
	Cell temperature sensing line poor contact or disconnected.	

Fault Name	Fault Cause	Troubleshooting Recommendation
	Dual-channel current comparison error too large, or current sensing line loop abnormality.	
	Dual-channel voltage comparison error too large or MCU vs AFE voltage comparison error too large, or voltage sensing line loop abnormality.	
	Temperature sensing line loop abnormality or poor contact/disconnection.	
	Overvoltage level 5 or overtemperature level 5, tripped three-terminal fuse.	The three-terminal fuse is blown. Contact the after-sales service center to replace the main control board.
Relay or MOS Overtemperature	Relay or MOS overtemperature.	This fault indicates the MOS temperature exceeds the specified threshold. Power off and let it sit for 2 hours for temperature recovery.
Shunt Overtemperature	Shunt overtemperature.	This fault indicates the shunt temperature exceeds the specified threshold. Power off and let it sit for 2 hours for temperature recovery.

Fault Name	Fault Cause	Troubleshooting Recommendation
BMS1 Other Fault 1 (Residential Storage)	Relay or MOS open circuit.	1. Upgrade software, power off and let it sit for 5 minutes, restart and see if the fault persists; 2. If it persists, replace the battery pack.
	Relay or MOS short circuit.	1. Upgrade software, power off and let it sit for 5 minutes, restart and see if the fault persists; 2. If it persists, replace the battery pack.
	Communication abnormality between master and slave clusters or cell inconsistency between clusters.	1. Check the slave battery information, software version, and if the communication cable connection to the master is normal. 2. Upgrade software.
	Battery system loop wiring harness abnormality, causing interlock signal loop not formed.	Check if the terminal resistor is installed correctly.
	BMS and PCS communication abnormality.	1. Confirm if the communication cable interface definitions between the inverter and the battery are correct; 2. Please contact the after-sales service center to check backend data and observe if the inverter and battery software match correctly.
	BMS master and slave control communication harness abnormality.	1. Check wiring, restart the battery; 2. Upgrade battery software. If the problem persists after restart, please contact the after-sales service center.

Fault Name	Fault Cause	Troubleshooting Recommendation
	Communication loss between main and negative chips.	
	Circuit breaker, shunt trip abnormality.	1. Power off and let it sit for 5 minutes, restart and see if the fault persists; 2. Observe the PACK and PCU bottom blind plugs, check if communication pins are loose or misaligned;
	MCU self-test failure.	Upgrade software, restart the battery. If the problem persists after restart, contact the after-sales service center.
	1. Software version too low or BMS board damaged 2. Large number of parallel inverters, excessive inrush current during battery pre-charge.	1. Upgrade software, observe if the fault persists. 2. If in parallel configuration, black-start the battery first, then start the inverters.
	MCU internal fault.	Upgrade software, restart the battery. This generally indicates MCU or external component damage. If the problem persists after restart, please contact the after-sales service center.
	Total control current exceeds specified threshold.	1. Power off and let it sit for 5 minutes, restart and see if the fault persists; 2. Check if the inverter power setting is too high, causing it to exceed the bus load;
	Inconsistent cells in parallel clusters.	Confirm if the cells in the parallel battery clusters are consistent.

Fault Name	Fault Cause	Troubleshooting Recommendation
	Reverse polarity connection of parallel cluster batteries.	Check if the positive and negative terminals of the parallel cluster batteries are reversed.
	Severe overtemperature/overvoltage etc. triggering the fire protection system.	Contact the after-sales service center.
Air Conditioner Failure	Air conditioner abnormal failure.	Try restarting the system. If the fault is not cleared, please contact the after-sales service center.
	Cabinet door not closed.	Check if the cabinet door is properly closed.
	Supply voltage too high.	Confirm if the supply voltage meets the air conditioner input voltage requirements. Confirm compliance before reapplying power.
	Insufficient supply voltage.	
	No voltage input.	
	Unstable supply voltage.	
	Compressor voltage unstable.	Try restarting the system. If the fault is not cleared, please contact the after-sales service center.
	Sensor poor contact or damaged.	
	Air conditioner fan abnormal.	
	Internal voltage or current abnormality in DCDC.	Refer to specific DC fault content.

Fault Name	Fault Cause	Troubleshooting Recommendation
BMS1 Other Fault 2 (Residential Storage)	DCDC overload or heatsink overtemperature, etc.	
	Cell sensing abnormality or inconsistent aging levels.	Please contact the after-sales service center.
	Fan operation not executed normally.	Please contact the after-sales service center.
	Output terminal screw loose or poor contact.	1. Power off the battery, check wiring and output terminal screw condition. 2. After confirmation, restart the battery and observe if the fault persists. If it persists, please contact the after-sales service center.
	Battery used for too long or cells severely damaged.	Please contact the after-sales service center to replace the pack.
	1. Software version too low or BMS board damaged 2. Large number of parallel inverters, excessive inrush current during battery pre-charge.	1. Upgrade software, observe if the fault persists. 2. If in parallel configuration, black-start the battery first, then start the inverters.
	Heating film damaged.	Please contact the after-sales service center.
	Heating film three-terminal fuse blown, heating function unavailable.	Please contact the after-sales service center.

Fault Name	Fault Cause	Troubleshooting Recommendation
	Software model, Cell Type, hardware model mismatch.	Check if the software model, SN, Cell Type, and hardware model are consistent. If not, please contact the after-sales service center.
	Thermal management board communication cable break.	1. Power off and let it sit for 5 minutes, restart and see if the fault persists; 2. If the fault does not recover, contact after-sales to replace the pack.
	Pack fan fault signal triggered.	
DCDC Fault	Output port voltage too high.	Check output port voltage. If the output port voltage is normal and the fault does not clear after restarting the battery, please contact the after-sales service center.
	DCDC module detects battery voltage exceeding maximum charging voltage.	Stop charging, discharge to below 90% SOC or let it sit for 2 hours. If ineffective and the fault persists after restart, please contact the after-sales service center.
	Heatsink overtemperature.	Let the battery sit for 1 hour for heatsink temperature to drop. If ineffective and the fault persists after restart, please contact the after-sales service center.
	Battery discharge current too high.	Check if the load exceeds the battery's discharge capability. Turn off the load or stop PCS operation for 60s. If ineffective and the fault persists after restart, please contact the after-sales service center.

Fault Name	Fault Cause	Troubleshooting Recommendation
	Output port power harness positive/negative reversed with parallel cluster batteries or PCS.	Turn off the battery manual switch, check if the output port wiring is correct, restart the battery.
	Output power relay cannot close.	Check if the output port wiring is correct and if there is a short circuit. If ineffective and the fault persists after restart, please contact the after-sales service center.
	Power device overtemperature.	Let the battery sit for 1 hour for internal power device temperature to drop. If ineffective and the fault persists after restart, please contact the after-sales service center.
	Relay welded/stuck.	If the fault persists after restart, please contact the after-sales service center.
Battery Rack Circulating Current Failure	1. Cell imbalance 2. Not fully charged for calibration during first power-up.	Record the fault phenomenon, restart the battery, wait a few minutes, and confirm if the fault disappears. If the problem persists after restart, please contact the after-sales service center.
BMS1 Other Fault 3 (Utility Storage)	Communication abnormality with Linux module.	1. Check if the communication cable link is normal. 2. Upgrade software, restart the battery and observe if the fault persists. If it persists, please contact the after-sales service center.
	Cell temperature rise too fast.	Cell abnormality, contact after-sales to replace the pack.
	SOC below 10%.	Charge the battery.

Fault Name	Fault Cause	Troubleshooting Recommendation
	SN writing does not comply with rules.	Check if the SN digit count is normal. If abnormal, please contact the after-sales service center.
	1. Daisy chain communication abnormality within battery cluster. 2. Inconsistent cell aging levels between battery clusters.	1. Check the contact condition of PACKs within a single cluster. 2. Confirm the usage of each cluster battery, such as cumulative charge/discharge capacity, cycle count, etc. 3. Please contact the after-sales service center.
	High humidity inside PACK.	-
	Fuse blown.	Contact after-sales to replace the pack.
	Battery low power.	Charge the battery.
BMS1 Other Fault 4 (Utility Storage)	Circuit breaker abnormality.	Contact after-sales to replace the pack.
	External device abnormality.	Contact after-sales to replace the pack.
Contactor Failure 1	-	-
Contactor Failure 2	-	-
Overload Protection (Ksic)	Sustained overload (over 690KVA) for 10s.	Please contact the after-sales service center.
Overload Protection (Smart Port)	Sustained overload (over 690KVA) for 10s.	Please contact the after-sales service center.

Fault Name	Fault Cause	Troubleshooting Recommendation
Overcurrent Protection (Ksic)	-	-
Overcurrent Protection (Smart Port)	-	-
Master AC On Meter Comm Error	1. Possibly meter not connected to master. 2. Possibly meter communication cable loose.	1. Check if the meter is connected to the master. 2. Check if the meter communication cable is loose.
Parallel Slave Meter Error	Meter connected to slave unit.	Set the machine with the meter as the master.
Slave AC On Timeout with Master	1. Slave address setting error. 2. Slave communication cable loose.	1. Check if slave addresses are duplicated. 2. Check if the parallel communication cable is loose.

8.5.2.3 Battery Fault (LX A5.0-10)

●When the battery ALM indicator shows red, troubleshoot the fault by combining it with the status indicated by the SOC indicator.

No.	SOC Indicator	Fault Name	Resolution
1	○○○○●	Battery Overvoltage	Power off and let it stand for 2 hours. If the problem persists after restarting, please contact the after-sales service center.
2	○○○●○	Battery Undervoltage	Please contact the after-sales service center.

No.	SOC Indicator	Fault Name	Resolution
3	○○○●●	High Cell Temperature	Power off and let it stand for 2 hours. If the problem persists after restarting, please contact the after-sales service center.
4	○○●○○	Charging Low Temperature	Power off and wait for the temperature to recover. If the problem persists after restarting, please contact the after-sales service center.
5	○○●○●	Discharging Low Temperature	Power off and wait for the temperature to recover. If the problem persists after restarting, please contact the after-sales service center.
6	○○●●○	Charging Overcurrent	Restart the battery. If the problem persists after restarting, please contact the after-sales service center.
7	○○●●●	Discharging Overcurrent	Restart the battery. If the problem persists after restarting, please contact the after-sales service center.
8	○●○○○	Insulation Resistance Too Low	Please contact the after-sales service center.
9	○●○○●	Excessive Temperature Difference	Power off and let it stand for 2 hours. If the problem persists after restarting, please contact the after-sales service center.
10	○●○●●	Excessive Cell Voltage Difference	Restart the battery and let it stand for 12 hours. If the problem persists, please contact the after-sales service center.
11	○●●○○	Cell Inconsistency	Please contact the after-sales service center.
12	○●●○●	Harness Abnormality	Restart the battery. If the problem persists after restarting, please contact the after-sales service center.
13	○●●●○	MOS Cannot Close	Restart the battery. If the problem persists after restarting, please contact the after-sales service center.
14	○●●●●	MOS Cannot Close	Restart the battery. If the problem persists after restarting, please contact the after-sales service center.

No.	SOC Indicator	Fault Name	Resolution
15	●○○○○	Parallel Cluster Fault	Please check if the battery models match. If they do not match, please contact the after-sales service center.
16	●○○○●	Interlock Signal Fault	Check if the termination resistor is installed correctly. If the problem persists after restarting, please contact the after-sales service center.
17	●○○●○	BMU Communication Fault	Restart the battery. If the problem persists after restarting, please contact the after-sales service center.
18	●○○●●	MCU Internal Communication Fault	Restart the battery. If the problem persists after restarting, please contact the after-sales service center.
19	●○●○○	Circuit Breaker Sticking Fault	Please contact the after-sales service center.
20	●○●○●	Precharge Failure Fault	Restart the battery. If the problem persists after restarting, please contact the after-sales service center.
21	●○●●○	MOS Overtemperature Fault	Power off and let it stand for 2 hours. If the problem persists after restarting, please contact the after-sales service center.
22	●○●●●	Combiner Box Overtemperature Failure	Power off and let it stand for 2 hours. If the problem persists after restarting, please contact the after-sales service center.
23	●●○○○	Reverse Connection Fault	Please contact the after-sales service center.
24	●●●●●	Microelectronic Fault	Please contact the after-sales service center.

8.5.2.4 Battery Fault (LX A5.0-30)

Alarm Status

●When the battery ALM indicator shows red, locate and troubleshoot the fault by combining it with the SOC indicator display status.

No.	SOC Indicator Light	Fault Name	Resolution
1	○○○●	Battery Over Voltage Battery Undervoltage	1. Check via the APP whether the inverter's charging current limit is 0. If it is 0, confirm that the communication cable connection between the battery and the inverter is secure and communication is normal. 2. Power off and leave it idle for 5 minutes. After restarting, confirm if the fault persists. 3. If the fault is not resolved, please contact the after-sales service center.
2	○○●●	Battery Overcurrent	1. Check via the APP if the battery model is correct. Confirm if the battery's real-time current is greater than the charging current limit or discharge current limit value. Please contact the after-sales service center. 2. If it is less, power off the battery or upgrade the program, then restart to confirm if the fault continues to occur. 3. If the fault is not resolved, please contact after-sales.
3	○○●○	Battery Overtemperature Battery Undertemperature Battery Terminal Overtemperature	Power off and leave it idle for 60 minutes, wait for the temperature to recover. If the problem persists after restarting, please contact the after-sales service center.

No.	SOC Indicator Light	Fault Name	Resolution
4	○●○○	Battery Imbalance	Power off and leave it idle for 30 minutes. If the problem persists after restarting, please contact the after-sales service center.
		SOH Too Low Fault	
5	●○●●	Pre-charge Failure Fault	1. Confirm if the battery output terminals and the inverter are connected reversely. 2. Power off and leave it idle for 5 minutes. If the problem persists after restarting, please contact the after-sales service center.
6	○●○●	Harness Fault	Confirm if the battery switch is closed. If the battery switch is closed and the problem persists, please contact the after-sales service center.
7	●●○○	Relay or MOSFET Overtemperature Shunt Overtemperature	Power off and leave it idle for 30 minutes. If the problem persists after restarting, please contact the after-sales service center.
		BMS Other Faults: Output Port Overtemperature Fault	1. Check if the battery power cables are tightened. 2. Power off and leave it idle for 5 minutes. If the problem persists after restarting, please contact the after-sales service center.
8	○●●○	Other Protection: MOSFET Cannot Close	Power off and leave it idle for 5 minutes. If the problem persists after restarting, please contact the after-sales service center.

No.	SOC Indicator Light	Fault Name	Resolution
9	○●●●	Other Protection: MOSFET Sticking	
10	●○○○	Other Protection: Parallel Cluster Fault	1. Confirm if the type and installation location of the terminal resistor used are correct. 2. Confirm that the communication cable connections between batteries and between the battery and the inverter are secure and communication is normal. 3. If the fault is not resolved, please contact the after-sales service center.
11	○○○○	Other Protection: Communication Loss with Inverter	1. Confirm that the communication cable connections between batteries and between the battery and the inverter are secure and communication is normal. 2. If the fault is not resolved, please contact the after-sales service center.
12	●○○●	Other Protection: BMU Communication Fault	1. Confirm if the type and installation location of the terminal resistor used are correct. 2. Confirm that the communication cable connections between batteries and between the battery and the inverter are secure and communication is normal. 3. Power off and leave it idle for 5 minutes. If the problem persists after restarting, please contact the after-sales service center.

No.	SOC Indicator Light	Fault Name	Resolution
13	●○●○	Other Protection: Circuit Breaker Sticking Fault	Power off and leave it idle for 5 minutes. If the problem persists after restarting, please contact the after-sales service center.
14	●●○●	Other Protection: Software Failure	Restart the battery. If the problem persists after restarting, please contact the after-sales service center.
15	●●●○	Other Protection: Hardware Overcurrent Fault	
16	●●●●	Other Protection: Microelectronics Fault	
		Heating Film Three-Terminal Abnormality	1. Upgrade the software. 2. Power off and leave it idle for 5 minutes. If the problem persists after restarting, please contact the after-sales service center.

8.5.2.5 Battery Fault (GW16.1-BAT-LV-G10)

When the battery alarm indicator shows red , the outer ring running light shows red flashing , and the operation light is off, troubleshoot the fault by combining the status indicated by the SOC indicator.

No.	SOC Indicator	Fault Name	Resolution

1	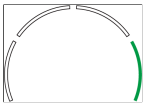	Battery Over Voltage Battery Undervoltage	1. Check via the App if the inverter's charging current limit is 0. If it is 0, verify that the communication cable connection between the battery and the inverter is secure and communication is normal. 2. Power off and let the system rest for 5 minutes. After restarting, confirm if the fault persists. 3. If the fault is not resolved, please contact the after-sales service center.
2	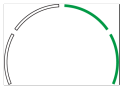	Battery Overcurrent	1. Check via the App if the battery model is correct. Confirm if the battery's real-time current exceeds the charging current limit or discharge current limit value. If so, please contact the after-sales service center. 2. If it is lower, power off the battery or upgrade the software, then restart to confirm if the fault persists. 3. If the fault is not resolved, please contact after-sales service.
3	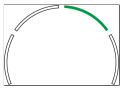	Battery Overtemperature Battery Undertemperature Battery Terminal Overtemperature	Power off and let the system rest for 60 minutes, waiting for the temperature to recover. If the problem persists after restarting, please contact the after-sales service center.
4	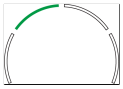	Battery Imbalance SOH Too Low Fault	Power off and let the system rest for 30 minutes. If the problem persists after restarting, please contact the after-sales service center.

5	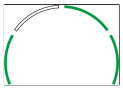	Precharge Failure Fault	1. Confirm if the battery output terminals and the inverter are connected reversely. 2. Power off and let the system rest for 5 minutes. If the problem persists after restarting, please contact the after-sales service center.
6	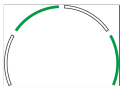	Harness Fault	Confirm if the battery circuit breaker is closed. If the breaker is closed and the problem persists, please contact the after-sales service center.
7	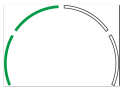	Relay or MOS Overtemperature	Power off and let the system rest for 30 minutes. If the problem persists after restarting, please contact the after-sales service center.
		Output Port Overtemperature	1. Check if the battery power cables are securely tightened. 2. Power off and let the system rest for 5 minutes. If the problem persists after restarting, please contact the after-sales service center.
8	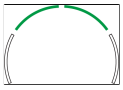	MOS Failure to Close	Power off and let the system rest for 5 minutes. If the problem persists after restarting, please contact the after-sales service center.
9	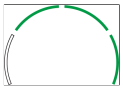	MOS Sticking	
10	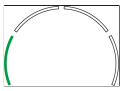	Parallel Cluster Fault	1. Confirm the type and installation location of the termination resistor are correct. 2. Verify that the communication cable connections between batteries and between the battery and the inverter are secure and communication is normal. 3. Use the battery SN code to confirm if the cells in the parallel cluster are consistent. 4. If the fault is not resolved, please contact the after-sales service center.

11	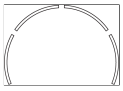	Software/Hardware Version Mismatch	Restart the battery. If the problem persists after restarting, please contact the after-sales service center.
12	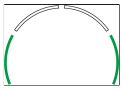	BMU Communication Fault	
13	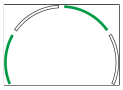	Circuit Breaker Sticking Fault	Power off and let the system rest for 5 minutes. If the problem persists after restarting, please contact the after-sales service center.
14	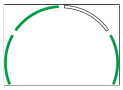	Software Failure	Restart the battery. If the problem persists after restarting, please contact the after-sales service center.
15	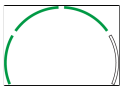	Hardware Overcurrent Fault	
16	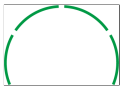	Microelectronics Fault	
		Heating Pad Three-Terminal Abnormality	1. Upgrade the software. 2. Power off and let the system rest for 5 minutes. If the problem persists after restarting, please contact the after-sales service center.

9 technical parameter

9.1 Inverter Parameters

Technical Data	GW3K-EO-G20	GW3.6K-EO-G20	GW5K-EO-G20	GW6K-EO-G20
Battery Side				
Battery Type	Li-Ion/Lead-acid			
Nominal Voltage (V)	48			
Voltage Range (V)	40-60			
Start-up Voltage (V)	44.2			
Number of Battery Inputs	1	1	1	1
Max. Continuous Charging Current (A)	70	90	120	130
Max. Continuous Discharging Current (A)	70	90	120	130
Max. Charging Power (kW)	3	3.6	5	6
Max. Discharging Power (kW)	3.3	4	5.5	6.6
PV Side				
Max. Input Power (kW)	6	7.2	10	12

Technical Data	GW3K-EO-G20	GW3.6K-EO-G20	GW5K-EO-G20	GW6K-EO-G20
Max. Input Voltage (V)*1	530	530	530	530
MPPT Operating Voltage Range (V)*2	50-480	50-480	50-480	50-480
MPPT Operating Voltage Range at Nominal Power (V)	180-480	220-480	150-480	180-480
Start-up Voltage (V)	60	60	60	60
Nominal Input Voltage (V)	360	360	360	360
Max. MPPT Current（A）	21	21	21/21	21/21
Max. MPPT Short Circuit Current (A)	26	26	26/26	26/26
Max. Backfeed Current to the Array (A)	0	0	0	0
Number of MPPTs	1	1	2	2
Number of Strings per MPPT	1	1	1	1
AC Side (On-Grid)				
Nominal Power (kW)	3	3.6	5	6
Max. Power (kW)	3.3	4	5.5	6.6

Technical Data	GW3K-EO-G20	GW3.6K-EO-G20	GW5K-EO-G20	GW6K-EO-G20
Nominal Power at 40°C (kW)	3	3.6	5	6
Max. Power at 40°C (kW)	3.3	4	5.5	6.6
Rated Apparent Power from Grid (kVA)	3	3.6	5	6
Max. Apparent Power from Grid (kVA)	8.0	8.0	8.0	8.0
Nominal Voltage (V)	220/230, L/N/PE	220/230, L/N/PE	220/230, L/N/PE	220/230, L/N/PE
Voltage Range (V)	170~280	170~280	170~280	170~280
Nominal Frequency (Hz)	50/60	50/60	50/60	50/60
Frequency Range (Hz)	45~55/55~65	45~55/55~65	45~55/55~65	45~55/55~65
Rated Current from Grid (A)	13.7 @220V 13.1 @230V	16.4 @220V 15.7 @230V	22.8 @220V 21.8 @230V	27.3 @220V 26.1 @230V
Max. Current from Grid (A)	35	35	35	35
Max. Output Fault Current (Peak and Duration) (A)	96A, 3μs	96A, 3μs	96A, 3μs	96A, 3μs
Inrush Current (Peak and Duration) (A)	96A, 3μs	96A, 3μs	96A, 3μs	96A, 3μs

Technical Data	GW3K-EO-G20	GW3.6K-EO-G20	GW5K-EO-G20	GW6K-EO-G20
Power Factor	0.8 leading~0.8 lagging	0.8 leading~0.8 lagging	0.8 leading~0.8 lagging	0.8 leading~0.8 lagging
THDi	<3%	<3%	<3%	<3%
Maximum Output Overcurrent Protection (A)	53	53	88	88
Type of Voltage	a.c.	a.c.	a.c.	a.c.
AC Side (Back-up Port)				
Rated Apparent Power (kVA)	3	3.6	5	6
Max. Apparent Power (kVA)	Off-grid：3.3（7.2, 10s) On-grid：8	Off-grid：4（7.2, 10s) On-grid：8	Off-grid：5.5（12, 10s) On-grid：8	Off-grid：6.6（12, 10s) On-grid：8
Nominal Voltage (V)	220/230，L/N/PE	220/230，L/N/PE	220/230，L/N/PE	220/230，L/N/PE
Nominal Frequency (Hz)	50/60	50/60	50/60	50/60
Frequency Range (Hz)	45~55/55~65	45~55/55~65	45~55/55~65	45~55/55~65
Rated Current (A)	13.7 @220V 13.1 @230V	16.4 @220V 15.7 @230V	22.8 @220V 21.8 @230V	27.3 @220V 26.1 @230V
Max. Current (A)*3	Off-grid：15 On-grid：35	Off-grid：18 On-grid：35	Off-grid：25 On-grid：35	Off-grid：30 On-grid：35

Technical Data	GW3K-EO-G20	GW3.6K-EO-G20	GW5K-EO-G20	GW6K-EO-G20
Max. Fault Current (Peak and Duration) (A)	96A, 3μs	96A, 3μs	96A, 3μs	96A, 3μs
Inrush Current (Peak and Duration) (A)	96A, 3μs	96A, 3μs	96A, 3μs	96A, 3μs
Maximum Overcurrent Protection (A)	53	53	88	88
THDv (@Linear Load)	<3%	<3%	<3%	<3%
On/Off-grid Switching Time（ms）	≤4	≤4	≤4	≤4
AC Side (Smart Port)				
Rated Apparent Power (kVA)	3	3.6	5	6
Max. Apparent Power (kVA)	8	8	8	8
Nominal Voltage (V)	220/230	220/230	220/230	220/230
Voltage Range (V)	170~280	170~280	170~280	170~280
Nominal Frequency (Hz)	50/60	50/60	50/60	50/60
Frequency Range (Hz)	45~55/55~65	45~55/55~65	45~55/55~65	45~55/55~65
Max. Current (A)	35	35	35	35
Efficiency				

Technical Data	GW3K-EO-G20	GW3.6K-EO-G20	GW5K-EO-G20	GW6K-EO-G20
Max. Efficiency	98.6%			
Max. Battery to AC Efficiency	96.0%			
MPPT Efficiency	99.9%			
Protection				
PV String Current Monitoring	Integrated	Integrated	Integrated	Integrated
PV Insulation Resistance Detection	Integrated	Integrated	Integrated	Integrated
Residual Current Monitoring	Integrated	Integrated	Integrated	Integrated
PV Reverse Polarity Protection	Integrated	Integrated	Integrated	Integrated
Anti-islanding Protection	Integrated	Integrated	Integrated	Integrated
AC Overcurrent Protection	Integrated	Integrated	Integrated	Integrated
AC Short Circuit Protection	Integrated	Integrated	Integrated	Integrated
AC Overvoltage Protection	Integrated	Integrated	Integrated	Integrated
DC Surge Protection	Type Ⅲ	Type Ⅲ	Type Ⅲ	Type Ⅲ
AC Surge Protection	Type Ⅱ	Type Ⅱ	Type Ⅱ	Type Ⅱ

Technical Data	GW3K-EO-G20	GW3.6K-EO-G20	GW5K-EO-G20	GW6K-EO-G20
General Data				
Operating Temperature Range (℃)	-35~+60	-35~+60	-35~+60	-35~+60
Operating Environment	Indoor/Outdoor	Indoor/Outdoor	Indoor/Outdoor	Indoor/Outdoor
Storage Temperature (℃)	-40~+85	-40~+85	-40~+85	-40~+85
Relative Humidity	0~95%	0~95%	0~95%	0~95%
Max. Operating Altitude (m)	3000	3000	3000	3000
Cooling Method	Smart Fan Cooling	Smart Fan Cooling	Smart Fan Cooling	Smart Fan Cooling
User Interface	LCD,WLAN+APP	LCD, WLAN+APP	LCD, WLAN+APP	LCD,WLAN+APP
Communication with BMS	CAN	CAN	CAN	CAN
Communication	RS485, WiFi+bluetooth	RS485, WiFi+bluetooth	RS485, WiFi+bluetooth	RS485, WiFi+bluetooth
Communication Protocols	Modbus-RTU	Modbus-RTU	Modbus-RTU	Modbus-RTU
Weight (kg)	< 13	< 13	< 13	< 13
Dimension (W×H×D mm)	337*456*201	337*456*201	337*456*201	337*456*201
Noise Emission (dB)	< 35	< 35	< 55	< 55

Technical Data	GW3K-EO-G20	GW3.6K-EO-G20	GW5K-EO-G20	GW6K-EO-G20
Topology	Non-isolated	Non-isolated	Non-isolated	Non-isolated
Power Self-consumption at Night (W)	<20	<20	<20	<20
Ingress Protection Rating	IP66	IP66	IP66	IP66
Anti-corrosion Class	C4L	C4L	C4L	C4L
DC Connector	PV: JK01M（(4~6 mm²) BAT: OT (Max.35mm²)	PV: JK01M（(4~6 mm²) BAT: OT (Max.35mm²)	PV: JK01M（(4~6 mm²) BAT: OT (Max.35mm²)	PV: JK01M（(4~6 mm²) BAT: OT (Max.35mm²)
AC Connector	OT（Max.6mm²)	OT（Max.6mm²)	OT（Max.6mm²)	OT（Max.6mm²)
Environmental Category	4K4H	4K4H	4K4H	4K4H
Pollution Degree	III	III	III	III
Overvoltage Category	DC II/ AC III	DC II/ AC III	DC II/ AC III	DC II/ AC III
Protective Class	I	I	I	I
Decisive Voltage Classification (DVC)	Battery: A PV: C AC: C Com: A	Battery: A PV: C AC: C Com: A	Battery: A PV: C AC: C Com: A	Battery: A PV: C AC: C Com: A
Mounting Method	Wall Mounted	Wall Mounted	Wall Mounted	Wall Mounted

Technical Data	GW3K-EO-G20	GW3.6K-EO-G20	GW5K-EO-G20	GW6K-EO-G20
Active Anti-islanding Method	SMS (Slip-mode frequency) +AFD*3	SMS (Slip-mode frequency) +AFD*3	SMS (Slip-mode frequency) +AFD*3	SMS (Slip-mode frequency) +AFD*3
Type of Electrical Supply System	TN-S, TN-C, TN-C-S, TT	TN-S, TN-C, TN-C-S, TT	TN-S, TN-C, TN-C-S, TT	TN-S, TN-C, TN-C-S, TT
Country of Manufacture	China	China	China	China
Certification				
Grid Standard	PC3、RETIE、IS166221、IS17980			
Safety Regulation	IEC62109			
EMC	EN IEC 61000-6 Series、IEC62920			

*1: When the input voltage is greater than 500V, the inverter will enter standby mode, and when the voltage returns to below 490V the inverter will return to normal operation.
*2: Please refer to the user manual for the MPPT Voltage Range at Nominal Power.
*3: AFDPF: Active Frequency Drift with Positive Feedback

9.2 Battery Technical Data

9.2.1 LX A5.0-10

Technical Data	LX A5.0-10	2*LX A5.0-10	n*LX A5.0-10
Usable Energy (kWh) *1	5	10	n×5
Battery Module	LX A5.0-10: 51.2V 5.0kWh		
Number of Modules	1	2	n

Technical Data	LX A5.0-10	2*LX A5.0-10	n*LX A5.0-10
Cell Type	LFP ($LiFePO_4$)		
Nominal Voltage (V)	51.2		
Operating Voltage Range (V)	47.5~57.6		
Nominal Dis-/Charge Current (A) *2	60	120	n×60 *3
Nominal Power (kW) *2	3	6	n×3 *3
Operating Temperature Range (℃)	Charge: 0~+50; Discharge: -10~+50		
Relative Humidity	0~95%		
Max. Operating Altitude (m)	3000		
Communication	CAN		
Weight (kg)	40	80	n×40
Dimensions (W×H×D mm)	LX A5.0-10 Module: 442×133×420 (Excluding hanger); 483x133x452 (Include hanger)		
Ingress Protection Rating	IP21		
Storage Temperature (℃)	0~+40 (< One Year); -20~0 (≤One Month); +40~+45(≤One Month)		
Mounting Method	Cabinet / Floor stacked / Wall-Mounted		
Round-trip Efficiency *4	95%		
Cycle Life *5	≥5000		

Technical Data		LX A5.0-10	2*LX A5.0-10	n*LX A5.0-10
Standard and Certification	Safety	IEC62619、IEC63056、IEC62040-1、INmetro		
	EMC	EN IEC61000-6-1, EN IEC61000-6-2, EN IEC61000-6-3, EN IEC61000-6-4		
	Transportation	UN38.3、ADR		

*1: Test conditions, 100% DOD, 0.2C charge & discharge at +25±2°C for battery system at beginning life. System Usable Energy may vary with different Inverter.
*2: Nominal Dis-/Charge Current and power derating will occur related to Temperature and SOC.
*3: Based on Using Battery Combiner Box to parallelize battery modules.
*4: Based on 2.5~3.65V voltage range @25±2℃ of Cell under 0.2C/0.2C Cell test condition. Cell 0.6C/0.6C Round-trip Efficiency is approximately 94%~95%.
*5: Based on 2.87~3.59V voltage range @25±2℃ of Cell under 0.6C/0.6C test condition and 70% EOL.
n: Max 15.

9.2.2 LX A5.0-30

Paramètres techniques	LX A5.0-30
Capacité nominale (kWh)	5.12
Énergie utilisable (kWh) * 1	5
Type de cellule	LFP (LiFePO4)
Plage de tension de fonctionnement (V)	43.2~58.24
Capacité nominale (Ah)	100
Courant de charge nominal (A) *2	60

Paramètres techniques	LX A5.0-30
Courant de charge continu maximal (A) *2*3	90
Courant de décharge nominal (A) *2	100
Courant de décharge continu maximal (A) *2*3	150
Courant de décharge pulsé maximal (A)*2*3	<200A（30s）
Puissance de décharge continue maximale (W)	7200
Communication	CAN
Plage de température de fonctionnement (℃)	Charge : 0 < T≤55 Décharge : -20 < T≤55
Altitude maximale de fonctionnement (m)	4000
Poids (Kg)	44
Dimensions (L x H x P mm)	442*133*520 (Sans crochet de suspension) 483*133*559 (Avec crochet de suspension)
Indice de protection	IP20
Méthode d'application	On-grid/On-grid + Backup/Hors réseau
Évolutivité	Max. 30 en parallèle (150kWh) (Main à main /Boîtier de combinaison /Barre omnibus)

Paramètres techniques	LX A5.0-30
Méthode de montage	Baie standard 19 pouces, Au sol, Montage mural
Rendement aller-retour*1	≥96%
Sécurité	IEC62619、IEC63056、N140
CEM	EN IEC61000-6-1、EN IEC61000-6-2、EN IEC61000-6-3、EN IEC61000-6-4
Transport	UN38.3、ADR
Environnement	ROHS

*1 Conditions de test : 100 % DOD, charge et décharge à 0,2C à 25 °C ± 2 °C, au début de la vie.
*2 Les valeurs de courant et de puissance de fonctionnement du système dépendront de la température et de l'état de charge (SOC).
*3 Les valeurs maximales de courant et de puissance de charge/décharge peuvent varier selon les modèles d'onduleur.

9.2.3 GW16.1-BAT-LV-G10

Technical Data	GW16.1-BAT-LV-G10
Battery Type	LFP (LiFePO4)
Rated Capacity (Ah)	314
Rated Energy (kWh)	16.1
Usable Energy (kWh)*1	≥14.9
Nominal Voltage(V)	51.2
Voltage Range(V)	45.92~57.76
Max. Continuous Charging Current (System) (A)	157

Technical Data	GW16.1-BAT-LV-G10
Max. Continuous Discharging Current (System) (A)	200
Max. Input.Power (kW)*2	8
Max. Output.Power (kW)*2	10
Peak Output Power (System)(kW)*2	16 (15s)
Charging Temperature Range(℃)	0~55
Discharging Temperature Range (℃)	-20~55
Relative Humidity	5-95%
Max. Operating Altitude (m)	4000
Communication	CAN
Weight (kg)	≤122
Useable Extinguishing Agent	CO2, H2O
Crucial Material	$LiFePO_4$, C, Cu, $LiPF_6$, Al, $(C_3H_6)n$
Ingress Protection	IP65
Protective Class	Ⅰ
Dimensions (W×H×D mm)	≤470*895*245 (No base)
Optional Function Configuration	Regulating wheel (Optional); Aerosol fire extinguishing (Optional)
Storage Temperature (℃)	-20 ~45
Max. Storage time	-20-35℃≤12months
	35-45℃≤ 6 months
Scalability	30P

Technical Data		GW16.1-BAT-LV-G10
Mounting Method		Wall-Mounted、Floor-Mounted
Cycle Life		≥6000 （25±2℃ 0.5C 90%DOD 70% SOH ）
Country of Manufacture		China
Standard and Certification	Safety	IEC62619, IEC60730，IEC63056，CE
	EMC	CE
	Transportation	UN38.3, MSDS

*1: Test conditions, 100% DOD (cell voltage range 2.87~3.61V), 0.2P charge & discharge at 25±2℃ for the battery system at the beginning of life. Usable energy is defined by its initial design value. Actual available energy may vary depending on charge/discharge rate, environmental conditions (e.g., temperature), and transport and storage factors.
*2: Max. Input Power / Max. Output Power / Peak Output Power derating will occur related to Temperature and SOC.
*3: This refers to the Cycle Life of the battery cell.

9.3 Smart Meter Technical Data

9.3.1 GMK110

technical parameter			GMK110
	Application		Single-phase
Input Parameter	voltage	Nominal Voltage (V)	220
		Voltage Range (V)	85~288
		Nominal Voltage Frequency (Hz)	50/60
	current	CT ratio	120A/40mA
		Number of CTs	1

technical parameter		GMK110
Communication		RS485
Communication Distance (m)		1000
User Interface		2LED
Accuracy	voltage/current	Class I
	Active Energy	Class I
	Reactive Energy	Class II
Power Consumption (w)		＜5
Mechanical Parameter	Dimensions (W x H x D mm)	19*85*67
	Weight (g)	50
	Mounting Method	DIN Rail Mounting
Environmental Parameter	IP Rating	IP20
	Operating Temperature Range (℃)	-30 ~ 60
	Storage Temperature Range (℃)	-30 ~ 60
	Relative Humidity (non-condensing)	0~95%
	Max. Operating Altitude (m)	3000

9.3.2 GM330

technical parameter		GM330
Measurement Range	Supported Grid Type	Three-phase, split-phase, single-phase
	Voltage Range L-L (Vac)	172~817
	Voltage Range L-N (Vac)	100~472
	Nominal Frequency (Hz)	50/60
	CT ratio	nA:5A
Communication Parameters	Communication Method	RS485
	Communication Distance (m/ft)	1000/3280
Accuracy Parameters	voltage/current	Class 0.5
	Active Energy	Class 0.5
	Reactive Energy	Class 1
General Parameters	Dimensions (WxHxD mm/in)	72x85x72/2.83x3.35×2.83
	Housing	4-module
	Weight (g/Ib)	240/0.53
	Mounting Method	DIN rail

technical parameter		GM330
	User Interface	4 LEDs, Reset button
	Power Consumption (W)	≤5
Environmental Parameters	IP Rating	IP20
	Operating Temperature Range (℃/°F)	-30~+70/-22~+158
	Storage Temperature Range (℃/°F)	-30~70/-22~+158
	Relative Humidity (non-condensing)	0~95%
	Max. Operating Altitude (m/ft)	3000/9842
Certification Parameters	Certifications	UL1741/ANSI

10 Appendix

10.1 FAQ

10.1.1 How to conduct auxiliary detection for smart meters/CT?

The meter detection function can detect whether the meter CT is connected correctly and the current operating status of the meter and CT.

- Method 1:

1. Go to the detection page via **[Home]** > **[Settings]** > **[Meter/CT Auxiliary Detection]**.
2. Click Start Detection, wait for the detection to complete, and then view the detection results.

- Method 2:

1. Click ⚙ > **[System Setup]** > **[Quick Setting]** > **[Meter/CT Auxiliary Detection]** to enter the detection page.
2. Click Start Detection, wait for the detection to complete, and then view the detection results.

10.1.2 How to Upgrade the Device Version

Through firmware information, you can view or upgrade the inverter's DSP version, ARM version, BMS version, and communication module software version. Some communication modules do not support upgrading the software version via the App, please refer to the actual situation.

- **Prompt for Upgrade:**

When the user opens the App, a upgrade prompt pops up on the home page, and the user can choose whether to upgrade. If upgrade is selected, follow the on-screen instructions to complete the upgrade.

- **Regular Upgrade:**

Via **[Home]** > **[Settings]** > **[Firmware Information]**, enter the firmware information

viewing interface.
Click Check for Updates, if there is a new version, follow the on-screen instructions to complete the upgrade.

- **Forced Upgrade:**

The App pushes upgrade information, and the user needs to upgrade according to the prompts, otherwise the App cannot be used. Follow the on-screen instructions to complete the upgrade.

10.2 Explanation of Terms

- **Explanation of Overvoltage Categories**
  - **Overvoltage Category I**: Equipment connected to circuits with measures to limit transient overvoltages to a relatively low level.
  - **Overvoltage Category II**: Energy-consuming equipment supplied from a fixed electrical installation. This category includes appliances, portable tools, and other household and similar loads. Overvoltage Category III is adopted if special requirements for the reliability and suitability of such equipment are specified.
  - **Overvoltage Category III**: Equipment in fixed electrical installations where the reliability and suitability of the equipment must meet special requirements. This includes switchgear in fixed electrical installations and industrial equipment permanently connected to fixed electrical installations.
  - **Overvoltage Category IV**: Equipment used at the origin of the electrical installation, including measuring instruments and primary overcurrent protection devices.
- **Explanation of Wet Location Categories**

Environmental Parameters	Level		
	3K3	4K2	4K4H
Temperature Range	0~+40℃	-33~+40℃	-33~+40℃
Humidity Range	5% to 85%	15% to 100%	4% to 100%

- **Explanation of Environmental Categories:**
  - **Outdoor Inverter**: Ambient air temperature range -25°C to +60°C, suitable for Pollution Degree 3 environments.
  - **Indoor Type II Inverter**: Ambient air temperature range -25°C to +40°C, suitable

for Pollution Degree 3 environments.
  - **Indoor Type I Inverter**: Ambient air temperature range 0°C to +40°C, suitable for Pollution Degree 2 environments.
- **Explanation of Pollution Degree Categories**
  - **Pollution Degree 1**: No pollution or only dry, non-conductive pollution.
  - **Pollution Degree 2**: Normally only non-conductive pollution occurs. Temporary conductivity caused by condensation must be expected occasionally.
  - **Pollution Degree 3**: Conductive pollution occurs, or dry non-conductive pollution becomes conductive due to condensation.
  - **Pollution Degree 4**: Persistent conductivity caused by conductive dust, rain, or snow.

10.3 Meaning of Battery SN Code

LXD10DSC0002

Digits 11-14 of the product SN code represent the production date code.
The production date shown in the image above is 2023-08-08.

- Digits 11 and 12 represent the last two digits of the production year; for example, the year 2023 is represented as 23.
- Digit 13 represents the production month; for example, August is represented as 8. Details are as follows:

Month	Jan-Sep	October	November	December
Month Code	1~9	A	B	C

- Digit 14 represents the production day; for example, the 8th is represented as 8. Numbers are used preferentially; for example, 1~9 represent the 1st to 9th days, and A represents the 10th day, and so on. Among these, the letters I and O are not used to avoid confusion. Details are as follows:

Production Date	Day 1	Day 2	Day 3	Day 4	Day 5	Day 6	Day 7	Day 8	Day 9
Code	1	2	3	4	5	6	7	8	9

Production Date	10th	11th	12th	13th	14th	15th	16th	17th	18th	19th	20th
Code	A	B	C	D	E	F	G	H	J	K	L

Production Date	21st	22nd	23rd	24th	25th	26th	27th	28th	29th	30th	31st
Code	M	N	P	Q	R	S	T	U	V	W	X

11 Contact Details

GoodWe Technologies Co., Ltd.
No. 90 Zijin Rd., New District, Suzhou, China
en.goodwe.com
service@goodwe.com